SICME ORANGE1

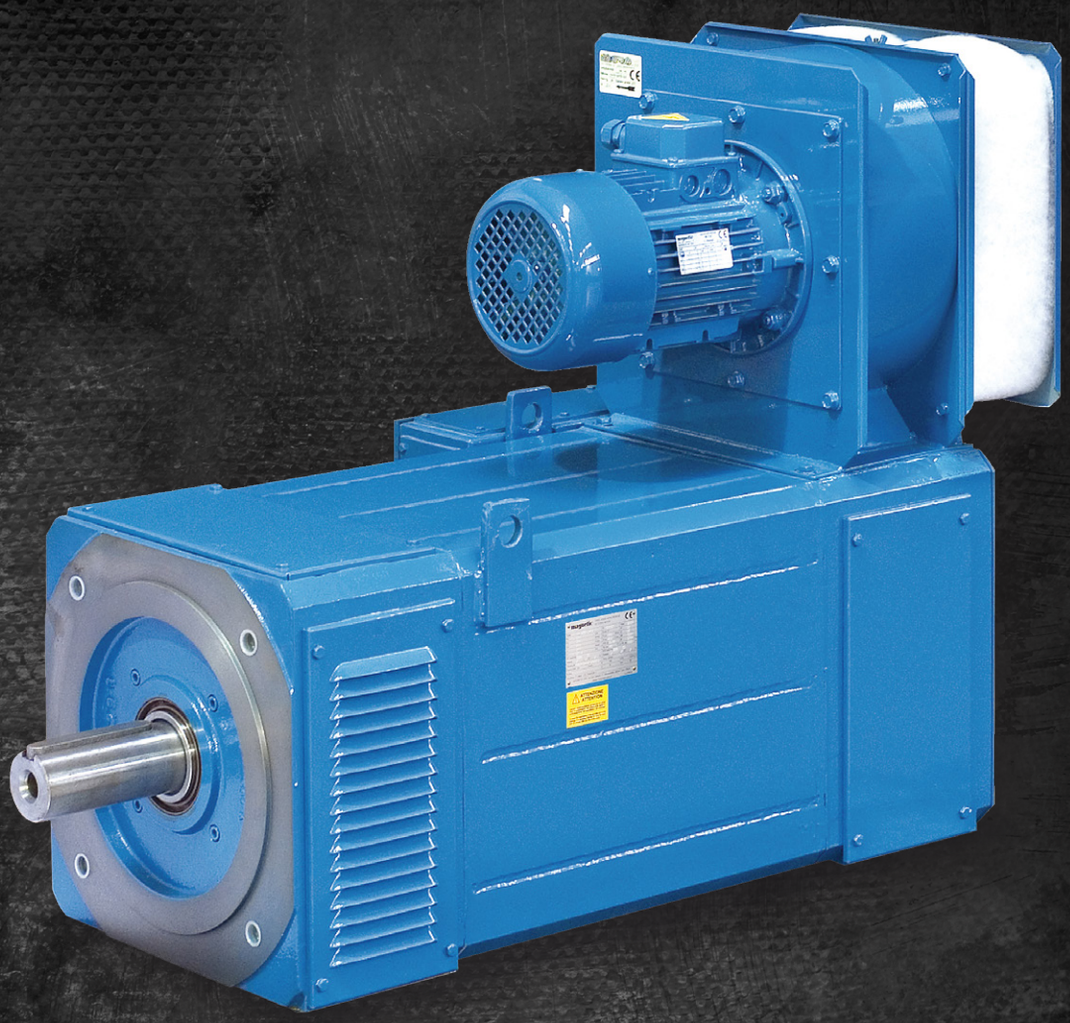

Asynchronous Vectorial Motors

MQ series

Frames 80 - 500 / from 0.8 to 3600 kW

EN

ORANGE1
HOLDING

A dynamic, strong and ambitious Group

Orange1 Holding is an international renown Group, one of the most important European manufacturers of single-phase and three-phase asynchronous electric motors. It has an annual capacity of more than 1 million motors and 5 million electric stators with an annual turnover of approx 235 million euro and more than 1600 workers in 15 production facilities. The group, established in 1971 by Leone Donazzan, chaired today by his son Armando Donazzan, is strongly focused on technological innovation, performance and customization to meet individual clients requirements.

DIE CASTING **ELECTRIC MOTORS** **TURNING PARTS**

2020

235 million turnover
1600 workers

ORANGE1 ELECTRIC MOTORS

125 ml Turnover
6 Factories
800 Headcount

ORANGE1 FOUNDRY

100 ml Turnover
4 Factories
720 Headcount

ORANGE1 PRECISION

10 ml Turnover
1 Factory
80 Headcount

Timeline

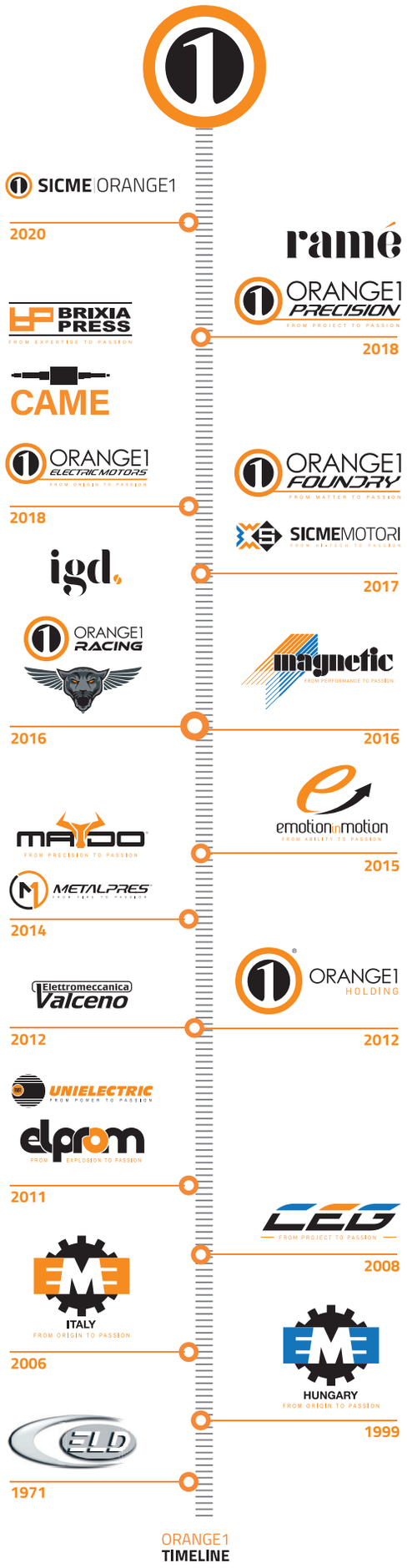
SICME ORANGE1
2020
BRIXIA PRESS
FROM EXPERTISE TO PASSION
CAME
ORANGE1 ELECTRIC MOTORS
FROM ORIGIN TO PASSION
2018
igd.
ORANGE1 RACING
2016
MAYDO
FROM PRECISION TO PASSION
METALPRES
2014
Elettromeccanica Valceno
2012
UNIELECTRIC
FROM POWER TO PASSION
elprom
FROM EXPLOSION TO PASSION
2011
EME
ITALY
FROM ORIGIN TO PASSION
2006
ELD
1971
ramé
ORANGE1 PRECISION
FROM PROJECT TO PASSION
2018
ORANGE1 FOUNDRY
FROM MATTER TO PASSION
SICME MOTORI
2017
magnetic
FROM PERFORMANCE TO PASSION
2016
emotion in motion
FROM ABILITY TO PASSION
2015
ORANGE1 HOLDING
2012
LEG
FROM PROJECT TO PASSION
2008
EME
HUNGARY
FROM ORIGIN TO PASSION
1999
ORANGE1
TIMELINE

WE ARE PASSION

We look to the future,
to anticipate customers' needs.

Soul, Heart and Brain striving to create real value to our customers and to ourselves. Our principal motto is "We Are Passion" in order to win the most passionate challenge: anticipate customers' needs. With its mission the company try to create real value to the customers by considering their perspectives and realizing their expectations. Orange1 Holding defines itself as a "Manufacturer of Solutions". How to ride through time? Orange1 tries to move with the time acting without hesitation in order to be constantly at the cutting edge of development in its sector.

RESEARCH & DEVELOPMENT

The R&D Department
is a strategic advantage for the Group.

The design and development of new products is a crucial factor in such a changing industrial society considering the technological innovations and the competitors. Corporate strategies and choices are extensive technological research, desire to emerge and a high level of originality. Orange1 products suit customers and market needs despite the high level of personalization. The launch of a new product is the conclusion of a thorough market analysis. By focusing on the flexibility and efficiency Orange1 Group responds to customers' demands designing customized models for special applications. This has allowed a notable technological and production development.

SICME|ORANGE1

Sicme Motori S.r.l., fondata nel 1967, produce motori a corrente alternata, velocità variabile e motori a corrente continua di alta qualità e rappresenta un punto di riferimento di eccellenza per la sua tecnologia che fornisce le migliori soluzioni economiche per molte applicazioni diverse. Dal 2002 collabora attivamente con l'Istituto di Ingegneria Elettrica del Politecnico di Torino ed è stato uno dei maggiori produttori mondiali di generatori eolici. Nel 2008 ha sviluppato motori con tecnologia ASR, il tipo di motore elettrica più rivoluzionario al mondo, e nel 2014 ha sviluppato una gamma innovativa di motori sincroni a riluttanza IE4 con un brevetto specifico.
Azienda con 40 anni di storia, nota in tutto il mondo per l'alta qualità e la tecnologia dei suoi prodotti, produce motori asincroni fino a 3700 Kw, motori sincroni fino a 2700 Kw, generatori idroelettrici fino a 3000 Kw, generatori Mini-Wind fino fino a 200 Kw e turbine eoliche fino a 5000 Kw. Tra molti altri progetti ha sviluppato e costruito le ruote del motore per il Rover che sbarcò su Marte.
Sicme Motori è anche uno dei leader europei per le applicazioni a velocità variabile e presenta una serie di motori trifase a riluttanza sincrona, progettati e gestiti solo da un convertitore di frequenza (inverter).
Nel 2020 Sicme Motori è stata rinominata Sicme-Orange1.

Asynchronous vectorial motors MQ series

Application fields

Cable transport
Cranes
Sheet metal working machines
Machine tools
Plastic extruders
Blowing machines
Woven wire manufacturing machines
Presses
Industrial washing machines
Amusement rides
Thread/cable manufacturing machines
Converting
Steel/copper cable working machines
Board working machines

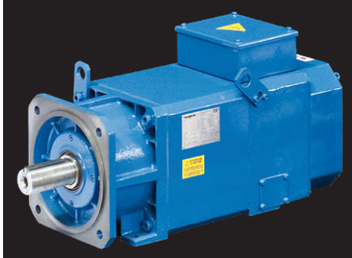

Asynchronous Vectorial Motors

MQ series

The asynchronous motors MQ series have been specially engineered to achieve reduced dimensions, high performances in variable speed applications with flux vector type controllers. They were born due the great experience of two important companies in the field of industrial automation: Magnetic Motors e SicmeMotori. The main feature is in the laminated stator pack which carries out the functions of the frame and integrates the air circulation system. In particular, these motors, even though they are sensibly more compact, make it possible to achieve very high specific powers with regard to a standard motor with the same shaft height. The distinctive electromagnetic and mechanical design permits operation in constant power mode at maximum speeds of up to 8000 RPM. The efficient stator cooling system uses an auxiliary electrofan to combine the benefits of reduced dimensions and high, continuous, low-speed torque capability.

MAIN CHARACTERISTICS

They are three-phases asynchronous motors with squirrel-cage, low losses laminated sheet with square frame visible from external of motor, a compact structure indipendent electrofan to obtain the following characteristics:

- High power with relation to the external size
- Small external dimensions
- High rotation speed (up to 8000 rpm)
- Maximum and continuous torque are available even at low speed
- Small moment of inertia of the rotor
- Degrees of protection IP54 and IP23
- Dimensional and power comparability with direct current motors.
- Ventilation and speed transducer incorporated in the motor structure
- High mechanical robustness
- High precision of rotation speed
- Insulation class F (CEI EN60034-1)

They are available with with 12 different shaft height (frame size 80-100-132-160-180-225-280-355-400-450-500 mm) with power ranging from 0,8 to 3600kW. In addition the MQ motors can also be manufactured with larger shaft height sizes on customer's request.
Standard mechanical protection degree available are: closed solution in IP 54 and an open solution in IP 23. Other solution upon request.
The cooling of the motor is provided by an axial or radial electric fan, mounted in the rear of the motor (no drive end side of coupling).
Motors frames 315-500 mm and upper are available with air-water IC86W or air-air exchanger IC666.
All standard selection of accessories or on request, include more common thermal protection detector (PTC, PT100, KLIXON etc).
As an option, motors frames 100÷280 mm can be equipped with a parking brake.
The whole series is dimensioned in F class; during CEI S1 service the max. overtemperature allowed is therefore 105°C. Notwithstanding this, in order to increase the machine reliability, almost all the insulating materials are in class H (Δt max 125°C, absolute max. foreseen temperature 180°C). The impregnation is always made under vacuum to guarantee the resin penetration.
The winding is made of copper foreseen with special enamel to resist to the peaks generated by the inverter (high voltage variations, dv/dt). In any case it is advisable to contain the PWM frequency and to check that there are no refraction phenomenons on very long power supply cables (high voltage peaks and dv/dt) considering the opportunity of using suitable solutions (for example to insert filters or chokes between inverter output and motor armature).

Further series of machines for completing the offer for special applications are also proposed:

- AJ Series
These motors have a low moment of inertia to achieve high dinamic performances.

- AW Series
These motors integrate a liquid cooling system for low noise applications and when it is necessary a high protection and/or to reduce the dimensions.

Operations

The main formulas that regulate the operations of the asyncronous motor are:

$$n_s = \frac{60 \times f}{p}$$

$$F = \frac{E}{f \times K}$$

$$T = F \times I_R$$

n_s	*synchronous speed [Rpm]*
	(it differs from the real speed only at load condition)
f	*supply frequency*
p	*N° of poles pairs (2 in this case)*
F	*magnetic flux [Wb]*
E	*induced voltage [V]*
K	*machine constant (winding turns, ...)*
T	*Torque [Nm]]*
I_R	*rotor current [A]*

In the operations at constant torque (until the nominal speed, nn) the motor flux is maintained constant (in the same way as in the D.C. motors) so as to maximize the torque constant and to obtain a system ready for the load change. In order to obtain this the E/f ratio is maintained constant therefore the torque depends directly from the rotor current. It is necessary to point out that "E" voltage is not the power supply voltage of the motor but differs from this in the voltage drop due to the resistance and to the stator leakage inductance.
The upper speed limit of this operation mode is determined by the voltage available from the converter beyond which the E/f radio cannot be kept constant and consequently the flux decreases.

The operation range besides the nominal speed is named "field weakening zone " for the flux reduction due to the frequency increase without the relative increase of the voltage. As indicated below between nn and n1 the nominal power of the motor is available: the flux decreases when the speed increases but at the same time even the load torque decreases in the same way. From the mentioned relations you can note that the rotor current remains constant as well as the induced voltage of the machine. The voltage at the motor does not remain constant but increases especially at high field weakening ratio: it is logical consequence that the value of n1 is defined from the value of available voltage.

In the following data sheets, the voltages 3x360V, 3x400V and 3x690V have been considered as the value usually available.
Over n1 and up to the absolute speed limit defined from nmax, a reduced power is available. The value is

P = Pn x n1 /n **where n= chosen speed**

This is due because the maximum torque of the motor is related to the mutual of the square of the flux and therefore, during the flux weakening, this value decreases much and over n1 causes a power derating. It is necessary to take care in the high field weakening ratios (>4) as, due to the complexity of the calculation algorithm, it can result harder to control with accuracy the motor-converter system .

In the following tables it is considered a mains voltage of 3x400VRMS and two different output voltage values available from the inverter to the motor according to the type of modulation adopted: 3x360VRMS and 3x400VRMS. In the first case (360V) windings of 345V (nominal voltage) are defined for high dynamic applications and/or wide range of constant power speed regulation; in the second case (400V) windings of 380 up to 400V are defined for generic applications without overload near nominal speed and constant power speed regulation. As the second ones and for big motors, there are tables referred to 3x690VRMS of mains and 3x690VRMS available from the inverter. All the characteristics showed depend on this value so it is important that the voltage available from the inverter output is compatible with the above mentioned values.

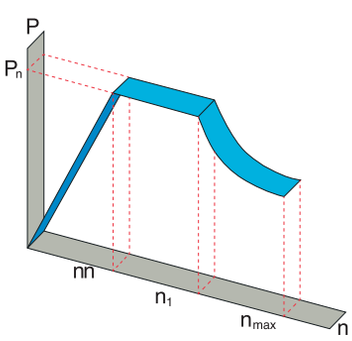

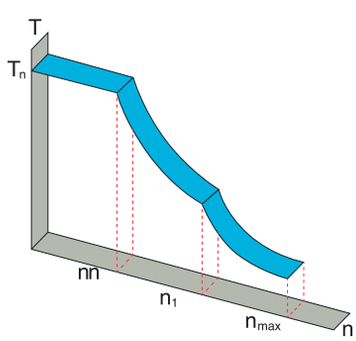

Permissible overload in the constant torque speed regulation (<nn) is reported in the following tables, max torque decreases near the nominal speed due to the reducted voltage margin.
At speed higher than nn, the overload margin decreases to zero at n1: curve of the picture between n1 and nmax shows power output limit due to the voltage supplied by the inverter. However, the RMS power must not exceed the nominal value Pn.

Environment condition for operation

The three-phase motor MQ series are designed to satisfy the performance reported on the datasheet in standard conditions of temperature (-15°C ; +40°C) and altitude (0 - 1000m asl).
Other different operation conditions, must be analized.
It is assumed that the environment in which our machines are installed is not critical. The correct situation is:

Dry, i.e. with relative humidity of the air below 75%.
Clean, i.e. without appreciable quantities of dust and dirt in general suspended in the air.
Free from aggressive chemical agents, i.e. without concentrations of gas or vapours that could chemically harm the copper, iron, aluminium, paints and insulation.

These motors can also be installed in difficult environments (damp, dusty, chemically harmful, etc), but in this case the degree of protection, method of cooling and possibly the choice of materials must be previously agreed upon.

Solutions for ventilation and protections

Motors foresee an independent auxiliary ventilation systems as following types:

PVAP

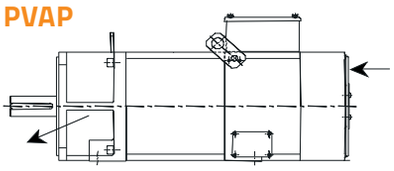

MQ 80÷180 with IP54 protections and PVAP execution.
The standard version of the whole series foresees an axial fan rear mounted on the same axis as the motor. The powers are those indicated in the tables.

PVA

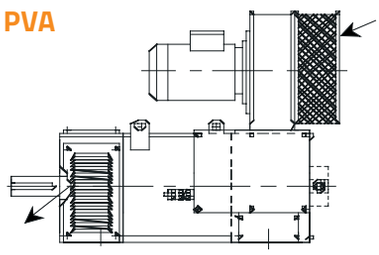

MQ 180÷500 in IP54 protections and PVA execution.
A centrifugal fan mounted radially to the motor is foreseen.
The powers are those indicated in the tables.

MQ 80÷500 in IP23 protections and PVA execution.
A centrifugal fan mounted radially to the motor is foreseen. The execution with protection reduced to IP23 allows a considerable increasing of the power for the same size.

Other solutions are available upon request. In the following some solutions are described as examples:

IP23 PVAP2 version
a centrifugal electrofan is mounted in the rear of motor to minimize the radial overall dimension.
The feature are the same of IP23 PVA solution

SAH version(only for 315-500 framesize)
the cooling is foreseen by an heat exchanger air-water. It improves the protection up to IP54.
The feature are the same of IP23 PVA solution.

Performance

SICME|ORANGE1

The data and powers shown in the technical tables refer to the following power supply and operating conditions:

Duty	Continuous running duty S1 according to IEC 34-1, CEI EN 60034-1 Standards
Ambient temperature	Max 40°C.
Temperature rise (Class F)	According to IEC 34-1, CEI EN 60034-1Standards.
Altitude	Max 1000 m above sea level.
Overloads	Admitted in S1 duty conditions, obviously complying with the catalog and name-plate data of the motor: 60% with a maximum time of 15 seconds and repeat events with a minimum interval of 10 minutes.
Power supply	Inverter power supply with voltage and frequency corresponding to the nominal data of the motor.

BEWARE: performance is guaranteed at the rated supply voltage as per the value in the head of tables.
Please, pay attention to these details before purchasing the motor; we can offer motors with specific voltages, for special requirements.

Key-words

Motor	Wind code	Nominal speed	Nominal power	Nominal torque	Maximum torque	Inertia	Nominal voltage	Nominal current	Nominal freq.	Maximum speed at Pn	Maximum speed	Weight
		nn [RPM]	Pn [kW]	Mn [Nm]	Mmax [Nm]	J [kgm²]	Vn [VRMS]	In [ARMS]	Fn [Hz]	n1 [RPM]	nmax [RPM]	W [kg]

nn	Nominal speed
Pn	Nominal mechanical power at the shaft for service factor S1
Mn	Nominal torque at the shaft
Mmax	Maximum output motor torque
J	Rotor inertia
Vn	Motor nominal voltage
In	Nominal current
Fn	Nominal power supply frequency
n1	Maximum speed at constant power (Pn) without voltage increase between nn and n1
nmax	Maximum mechanical speed not in continuous duty
W	Motor weight

Attention:

Electrical data and performances are indicative and can be changed without notice.
The maximum continuos value of speed is 70% of max speed (nmax) and it is referred to the standard execution (low radial loads). Other bearing solution have different values of speed.

The value in blues of frequencies are only indicative

Degree of protection: IP54
Cooling: IC416
Supply voltage from inverter: 3x360VRMS

SICME|ORANGE1

Motor	Wind code	Nominal speed	Nominal power	Nominal torque	Maximum torque	Inertia	Nominal voltage	Nominal current	Nominal freq.	Maximum speed at Pn	Maximum speed	Weight
		nn [RPM]	Pn [kW]	Mn [Nm]	Mmax [Nm]	J [kgm²]	Vn [VRMS]	In [ARMS]	Fn [Hz]	n1 [RPM]	nmax [RPM]	W [kg]
80 S	E1	850	0.8	10	25	0,0060	340	2,2	28.3	2040	9000	23
	F1	1250	1.2	9.5	25	0,0060	335	3,3	41.7	3000	9000	23
	F2	1500	1.4	9.5	25	0,0060	335	3,9	50.0	3580	9000	23
	F3	1800	1.7	9	25	0,0060	330	4,5	60.0	4250	9000	23
	G1	2200	1.9	8.6	25	0,0060	340	5,0	73.3	5330	9000	23
80 M	E1	850	1.3	14.7	35	0,0076	340	3,2	28.3	2040	9000	27
	F1	1250	1.8	14	35	0,0076	335	4,7	41.7	3000	9000	27
	F2	1500	2.2	14	35	0,0076	335	5,6	50.0	3580	9000	27
	F3	1800	2.5	13.3	35	0,0076	330	6,5	60.0	4250	9000	27
	G1	2200	2.9	12.6	35	0,0076	340	7,3	73.3	5330	9000	27
80 L	E1	850	1.7	20	48	0,0102	340	4,2	28.3	2040	9000	31
	F1	1250	2.4	19	48	0,0102	335	6,3	41.7	3000	9000	31
	F2	1500	2.9	19	48	0,0102	335	7,5	50.0	3580	9000	31
	F3	1800	3.4	18.1	48	0,0102	330	8,7	86.6	4250	9000	31
	G1	2200	3.9	17.1	48	0,0102	340	9,8	73.3	5330	9000	31
80 P	E1	850	2.3	26.8	65	0,0137	340	5,6	28.3	2040	9000	37
	F1	1250	3.3	25.5	65	0,0137	335	8,3	41.7	3000	9000	37
	F2	1500	4.0	25.5	65	0,0137	335	10,0	50.0	3580	9000	37
	F3	1800	4.5	24.2	65	0,0137	330	11,6	60.0	4250	9000	37
	G1	2200	5.3	23	65	0,0137	340	12,9	73.3	5330	9000	37
100 S	E1	1000	2,5	23,9	40	0,019	345	6,9	35,7	1600	8000	50
	FB	1300	3,2	23,8	40	0,019	345	8,7	45,7	2100	8000	50
	F1	1500	3,7	23,6	40	0,019	330	10	52,5	2800	8000	50
	F2	1800	4,4	23,5	40	0,019	345	11,8	62,3	3000	8000	50
	G1	2250	5,5	23,3	40	0,019	330	15	77,3	4500	8000	50
	GA	2500	6	22,9	40	0,019	340	16	85,5	4700	8000	50
	H1	3000	6,8	21,6	40	0,019	330	18,3	102,5	5700	8000	50
100 M	E2	1000	4,1	39,2	70	0,025	335	11	35,5	2000	8000	65
	FB	1300	5,3	38,6	70	0,025	345	13,7	45,4	2300	8000	65
	F1	1500	6	38,2	70	0,025	345	15,2	52,2	2500	8000	65
	F3	1800	7,1	37,6	70	0,025	345	18	62,1	3200	8000	65
	FA	2000	7,8	37,2	70	0,025	345	19,8	68,7	3600	8000	65
	G1	2250	8,6	36,5	70	0,025	335	22,2	77,1	4600	8000	65
	G2	2500	9,5	36,1	70	0,025	345	24,3	85,3	4600	8000	65
	H1	3000	11	35	70	0,025	335	29,2	102	6300	8000	65
100 L	E1	1000	5,7	54,4	90	0,031	330	15,6	35,3	2200	8000	80
	FC	1300	7,2	53,2	90	0,031	345	18,3	45,3	2300	8000	80
	F1	1500	8,2	52,2	90	0,031	340	21	52	3000	8000	80
	FB	1800	9,6	50,9	90	0,031	345	24,5	61,9	3400	8000	80
	GA	2000	10,5	50,3	90	0,031	340	27	68,6	4000	8000	80
	G1	2250	11,6	49,2	90	0,031	335	30	77	4700	8000	80
	G2	2500	12,6	48,1	90	0,031	330	32,5	85,2	5900	8000	80
	H1	3000	14,5	46,2	90	0,031	340	36,7	101,9	6100	8000	80
100 P	E2	1000	6,9	66,2	110	0,037	315	19,4	35,2	2800	8000	90
	FB	1300	8,8	64,8	110	0,037	330	23,2	45,2	3100	8000	90
	F1	1500	10	63,7	110	0,037	335	25	51,9	3200	8000	90
	F3	1800	11,7	62,2	110	0,037	345	29,1	61,8	3400	8000	90
	GA	2000	12,8	61	110	0,037	320	34	68,4	5800	8000	90
	G1	2250	14,1	59,8	110	0,037	335	36,5	76,7	5300	8000	90
	G2	2500	15,1	57,8	110	0,037	340	38,2	85	5500	8000	90
	H1	3000	17	54,1	110	0,037	345	43,5	101,6	6500	8000	90

Degree of protection: IP54
Cooling: IC416
Supply voltage from inverter: 3x360VRMS

SICME|ORANGE1

Motor	Wind code	Nominal speed	Nominal power	Nominal torque	Maximum torque	Inertia	Nominal voltage	Nominal current	Nominal freq.	Maximum speed at Pn	Maximum speed	Weight
		nn [RPM]	Pn [kW]	Mn [Nm]	Mmax [Nm]	J [kgm²]	Vn [VRMS]	In [ARMS]	Fn [Hz]	n1 [RPM]	nmax [RPM]	W [kg]
132 K	EB	850	9,5	107	250	0,067	330	24	29,9	2400	7000	132
	E1	1000	11	105	250	0,067	340	27	34,9	2300	7000	132
	FA	1300	14	103	250	0,067	345	34	44,9	2900	7000	132
	F1	1500	16	102	250	0,067	340	38	51,5	3600	7000	132
	FB	1800	19	101	250	0,067	340	46	61,4	4700	7000	132
	GA	2000	21	100	250	0,067	330	52	68,2	6000	7000	132
	G1	2250	23	98	250	0,067	345	54	76,4	5300	7000	132
	GB	2500	25	95	250	0,067	335	61	84,7	7000	7000	132
	H1	3000	29	92	250	0,067	330	70	101,4	7000	7000	132
132 S	EB	850	13	146	340	0,086	340	32	29,8	2000	7000	157
	E1	1000	15	143	340	0,086	340	36	34,7	2500	7000	157
	FA	1250	18	138	340	0,086	345	43	43	2800	7000	157
	F1	1500	21	134	340	0,086	345	48	51,3	3400	7000	157
	F4	1800	24	127	340	0,086	340	57	61,2	4900	7000	157
	GA	2000	26	124	340	0,086	345	61	67,9	4800	7000	157
	G1	2250	28	119	340	0,086	345	64	76,3	5200	7000	157
	GB	2500	30	115	340	0,086	335	75	84,4	7000	7000	157
	H1	3000	34	108	340	0,086	345	80	101,1	7000	7000	157
132 M	E2	850	15	169	380	0,098	345	36	29,9	1700	7000	175
	EA	1000	17	162	380	0,098	325	43	34,7	3100	7000	175
	FA	1300	21	156	380	0,098	345	49	44,7	2900	7000	175
	F1	1500	24	153	380	0,098	345	54	51,3	3400	7000	175
	F3	1800	27	144	380	0,098	340	65	61,2	5100	7000	175
	GA	2000	29	138	380	0,098	345	70	67,8	5200	7000	175
	G1	2250	31	132	380	0,098	345	74	76,1	5900	7000	175
	G2	2500	33	126	380	0,098	345	80	84,4	6800	7000	175
	H1	3000	37	118	380	0,098	345	85	101,1	7000	7000	175
132 P	E3	850	18	202	430	0,12	345	44	29,7	1900	7000	200
	E1	1000	21	201	430	0,12	340	51	34,6	2500	7000	200
	FA	1250	26	199	430	0,12	340	60	42,9	3200	7000	200
	F1	1500	30	191	430	0,12	345	68	51,2	3500	7000	200
	F3	1800	33	175	430	0,12	345	77	61,1	4700	7000	200
	GA	2000	35	167	430	0,12	340	83	67,8	5900	7000	200
	G1	2250	37	157	430	0,12	335	89	76	7000	7000	200
	G2	2500	39	149	430	0,12	330	99	84,3	7000	7000	200
	H1	3000	43	137	430	0,12	330	108	100,9	7000	7000	200
132 X	E2	850	20	225	460	0,126	345	47	29,6	1900	7000	220
	E1	1000	23	220	460	0,126	335	55	34,5	2900	7000	220
	FA	1300	29	213	460	0,126	340	68	44,5	3400	7000	220
	F1	1500	33	210	460	0,126	330	80	51,1	5100	7000	220
	F2	1800	37	196	460	0,126	345	85	61,1	4600	7000	220
	GA	2000	39	186	460	0,126	340	92	67,7	6000	7000	220
	G1	2250	41	174	460	0,126	335	100	76	7000	7000	220
	G2	2500	43	164	460	0,126	315	112	84,2	7000	7000	220
	H1	3000	47	150	460	0,126	315	127	100,8	7000	7000	220

Degree of protection: IP54
Cooling: IC416
Supply voltage from inverter: 3x360VRMS

SICME|ORANGE1

Motor	Wind code	Nominal speed	Nominal power	Nominal torque	Maximum torque	Inertia	Nominal voltage	Nominal current	Nominal freq.	Maximum speed at Pn	Maximum speed	Weight
		nn [RPM]	Pn [kW]	Mn [Nm]	Mmax [Nm]	J [kgm²]	Vn [VRMS]	In [ARMS]	Fn [Hz]	n1 [RPM]	nmax [RPM]	W [kg]
160 M	E9	650	19	279	750	0,24	330	42	23,1	1800	6000	255
	EA	850	24	270	750	0,24	335	51	29,7	2200	6000	255
	E8	1000	28	267	750	0,24	340	58	34,7	2400	6000	255
	FC	1300	35	257	750	0,24	345	73	44,6	2900	6000	255
	F1	1500	40	255	750	0,24	340	82	51,3	3900	6000	255
	F2	1800	45	239	750	0,24	340	94	61,2	4800	6000	255
	F5	2000	48	229	750	0,24	345	98	67,9	4700	6000	255
	G1	2250	51	216	750	0,24	340	107	76,1	6000	6000	255
	G2	2500	53	202	750	0,24	345	110	84,4	6000	6000	255
160 L	EC	650	23	338	940	0,302	340	53	23	1600	6000	310
	EA	850	29	326	940	0,302	345	64	29,6	1900	6000	310
	E1	1000	33	315	940	0,302	340	73	34,6	2600	6000	310
	FB	1250	40	306	940	0,302	345	87	42,8	3100	6000	310
	F1	1500	46	293	940	0,302	340	100	51,1	4300	6000	310
	F3	1750	50	273	940	0,302	340	111	59,4	5200	6000	310
	FA	1950	53	260	940	0,302	345	116	66	5300	6000	310
	G1	2250	57	242	940	0,302	335	132	75,9	6000	6000	310
	GB	2500	59	225	940	0,302	330	140	84,2	6000	6000	310
160 P	EC	650	27	397	1100	0,36	325	64	22,9	2200	5000	350
	EA	850	34	382	1100	0,36	335	77	29,5	2600	5000	350
	E1	1000	39	372	1100	0,36	335	88	34,5	3200	5000	350
	FA	1250	47	359	1100	0,36	345	102	42,8	3400	5000	350
	F1	1500	53	337	1100	0,36	345	114	51,1	4000	5000	350
	FB	1750	59	322	1100	0,36	345	128	59,3	5000	5000	350
	FC	1950	62	304	1100	0,36	345	136	66	5000	5000	350
	G1	2150	65	289	1100	0,36	345	145	72,6	5000	5000	350
	G2	2400	67	267	1100	0,36	340	153	80,8	5000	5000	350
160 X	E3	650	30	441	1200	0,39	345	67	22,9	1600	4500	395
	EA	850	38	427	1200	0,39	340	85	29,5	2500	4500	395
	E1	1000	43	411	1200	0,39	345	93	34,5	2500	4500	395
	FA	1300	54	397	1200	0,39	345	117	44,4	3600	4500	395
	F1	1500	60	382	1200	0,39	335	134	51	4500	4500	395
	F2	1700	65	365	1200	0,39	345	142	57,6	4500	4500	395
	FC	1950	69	338	1200	0,39	345	150	65,9	4500	4500	395
	G1	2200	72	313	1200	0,39	345	159	74,2	4500	4500	395
	G2	2500	73	279	1200	0,39	345	167	84,1	4500	4500	395

Degree of protection: IP54
Cooling: IC416
Supply voltage from inverter: 3x360VRMS

SICME|ORANGE1

	Motor	Wind code	Nominal speed	Nominal power	Nominal torque	Maximum torque	Inertia	Nominal voltage	Nominal current	Nominal freq.	Maximum speed at Pn	Maximum speed	Weight
			nn [RPM]	Pn [kW]	Mn [Nm]	Mmax [Nm]	J [kgm²]	Vn [VRMS]	In [ARMS]	Fn [Hz]	n1 [RPM]	nmax [RPM]	W [kg]
PVA VENTILATION	180 K	EA	580	23	379	1000	0.490	330	59	20.2	1200	4500	390
		E1	1000	39	372	1000	0.490	335	92	34.2	2000	4500	390
		F1	1500	56	357	1000	0.490	335	128	50.8	3200	4500	390
		F2	1800	65	345	1000	0.490	345	144	60.8	3300	4500	390
		G1	2100	73	332	1000	0.490	345	164	70.7	4200	4500	390
		G3	2600	83	305	1000	0.490	340	189	87.3	4500	4500	390
	180 S	EA	580	28	461	1250	0.590	340	68	20.2	1100	4500	435
		E1	1000	47	449	1250	0.590	345	106	34.2	1900	4500	435
		F1	1500	67	427	1250	0.590	345	146	50.8	2900	4500	435
		F3	1750	76	415	1250	0.590	345	167	59.1	3700	4500	435
		G2	2150	87	386	1250	0.590	340	194	72.4	4500	4500	435
		G3	2450	93	362	1250	0.590	345	208	82.3	4500	4500	435
	180 M	EA	580	33	543	1500	0.690	345	79	20.3	1100	4500	480
		E1	1000	55	525	1500	0.690	340	125	34.2	2200	4500	480
		F1	1500	79	503	1500	0.690	345	173	50.8	3200	4500	480
		F3	1800	90	477	1500	0.690	335	202	60.7	4500	4500	480
		G1	2100	99	450	1500	0.690	345	218	70.7	4500	4500	480
		G2	2400	106	422	1500	0.690	345	237	80.7	4500	4500	480
	180 L	EA	580	38	626	1700	0.810	340	91	20.2	1300	4500	535
		E1	1000	64	611	1700	0.810	345	143	34.2	2100	4500	535
		F1	1550	94	579	1700	0.810	340	208	52.4	4000	4500	535
		F2	1800	105	557	1700	0.810	345	226	60.8	4300	4500	535
		G1	2050	113	526	1700	0.810	345	247	69.0	4500	4500	535
		G2	2400	120	477	1700	0.810	345	270	80.6	4500	4500	535
	180 P	EA	580	43	708	1900	0.920	340	102	20.2	1400	4500	580
		E1	1000	73	697	1900	0.920	340	164	34.2	2600	4500	580
		F1	1500	105	668	1900	0.920	335	232	50.8	4500	4500	580
		F2	1800	119	631	1900	0.920	345	254	60.8	4500	4500	580
		GA	2100	129	587	1900	0.920	345	279	70.7	4500	4500	580
		G2	2600	134	492	1900	0.920	345	298	87.3	4500	4500	580
PVAP VENTILATION	180 K	EA	580	20	329	1000	0.490	330	52	20.1	1400	4500	380
		E1	1000	34	325	1000	0.490	335	84	34.1	2200	4500	380
		F1	1500	49	312	1000	0.490	335	115	50.7	3600	4500	380
		F2	1800	57	302	1000	0.490	345	130	60.7	3700	4500	380
		G1	2100	64	291	1000	0.490	340	149	70.6	4500	4500	380
		G3	2600	73	268	1000	0.490	340	171	87.2	4500	4500	380
	180 S	EA	580	24	395	1250	0.590	340	59	20.1	1300	4500	425
		E1	1000	41	392	1250	0.590	345	95	34.1	2100	4500	425
		F1	1500	59	376	1250	0.590	345	131	50.7	3300	4500	425
		F3	1750	67	366	1250	0.590	345	151	59.0	4100	4500	425
		G2	2150	76	338	1250	0.590	340	174	72.3	4500	4500	425
		G3	2450	81	316	1250	0.590	340	188	82.2	4500	4500	425
	180 M	EA	580	29	477	1500	0.690	340	70	20.1	1400	4500	470
		E1	1000	48	458	1500	0.690	340	112	34.1	2500	4500	470
		F1	1500	69	439	1500	0.690	340	154	50.7	4000	4500	470
		F3	1800	79	419	1500	0.690	335	181	60.6	4500	4500	470
		G1	2100	87	396	1500	0.690	345	195	70.6	4500	4500	470
		G2	2400	93	370	1500	0.690	345	213	80.6	4500	4500	470
	180 L	EA	580	33	543	1700	0.810	340	79	20.1	1500	4500	525
		E1	1000	56	535	1700	0.810	345	128	34.1	2400	4500	525
		F1	1550	83	511	1700	0.810	340	185	52.3	4500	4500	525
		F2	1800	92	488	1700	0.810	345	202	60.7	4500	4500	525
		G1	2050	99	461	1700	0.810	340	222	69.0	4500	4500	525
		G2	2400	105	418	1700	0.810	340	241	80.6	4500	4500	525
	180 P	EA	580	38	626	1900	0.920	340	91	20.1	1700	4500	570
		E1	1000	64	611	1900	0.920	340	148	34.1	2900	4500	570
		F1	1500	92	586	1900	0.920	335	207	50.7	4500	4500	570
		F2	1800	105	557	1900	0.920	345	230	60.7	4500	4500	570
		GA	2100	112	509	1900	0.920	345	249	70.6	4500	4500	570
		G2	2600	118	433	1900	0.920	345	271	87.2	4500	4500	570

Degree of protection: IP54
Cooling: IC416
Supply voltage from inverter: 3x360VRMS

SICME|ORANGE1

Motor	Wind code	Nominal speed	Nominal power	Nominal torque	Maximum torque	Inertia	Nominal voltage	Nominal current	Nominal freq.	Maximum speed at Pn	Maximum speed	Weight
		nn [RPM]	Pn [kW]	Mn [Nm]	Mmax [Nm]	J [kgm²]	Vn [VRMS]	In [ARMS]	Fn [Hz]	n1 [RPM]	nmax [RPM]	W [kg]
225 S	E6	650	46	676	1670	1,05	340	103	22,3	1500	3500	675
	EA	850	58	652	1670	1,05	345	128	29	1800	3500	675
	EB	1000	67	640	1670	1,05	345	144	33,9	2200	3500	675
	FA	1300	82	602	1670	1,05	340	180	43,9	3400	3500	675
	F1	1500	93	592	1670	1,05	330	211	50,6	3500	3500	675
	F3	1900	108	543	1670	1,05	340	237	63,8	3500	3500	675
	G1	2250	121	514	1670	1,05	345	261	75,5	3500	3500	675
225 L	E4	650	64	940	2230	1,5	345	139	22,3	1400	3500	860
	EC	850	81	910	2230	1,5	330	182	29	2700	3500	860
	E1	1000	94	898	2230	1,5	330	208	33,9	3200	3500	860
	FA	1250	112	856	2230	1,5	340	241	42,3	3500	3500	860
	F1	1500	130	828	2230	1,5	330	290	50,6	3500	3500	860
	F2	1800	142	753	2230	1,5	345	312	60,5	3500	3500	860
225 X	ED	650	92	1352	3270	2,13	335	200	22,3	2100	3500	1100
	EA	800	111	1325	3270	2,13	345	235	27,3	2100	3500	1100
	E2	1000	135	1289	3270	2,13	345	282	34	2600	3500	1100
	FA	1300	166	1220	3270	2,13	345	344	44	3500	3500	1100
	F1	1500	184	1172	3270	2,13	345	388	50,6	3500	3500	1100
	F2	1800	205	1088	3270	2,13	340	440	60,6	3500	3500	1100
280 M	EA	620	123	1894	4710	3,93	345	249	21,1	1400	3000	1290
	E1	750	146	1859	4710	3,93	345	294	25,5	1800	3000	1290
	E2	950	181	1819	4710	3,93	345	361	32,1	2300	3000	1290
	F1	1280	236	1761	4710	3,93	345	469	43,1	3000	3000	1290
280 L	EA	510	122	2284	5660	4,725	345	248	17,5	1200	3000	1520
	E1	620	146	2249	5660	4,725	345	294	21	1400	3000	1520
	E2	780	181	2216	5660	4,725	345	362	26,4	1900	3000	1520
	F1	1050	236	2146	5660	4,725	345	470	35,4	2600	3000	1520
	F2	1580	328	1982	5660	4,725	345	655	53,1	3000	3000	1520
280 X	E1	510	132	2472	6110	5,682	345	278	17,4	1200	2800	1890
	E2	650	165	2424	6110	5,682	345	345	22,1	1500	2800	1890
	F1	870	215	2360	6110	5,682	345	448	29,4	2100	2800	1890
	F2	1320	305	2206	6110	5,682	345	637	44,4	2800	2800	1890

Degree of protection: IP54
Cooling: IC416
Supply voltage from inverter: 3x400VRMS

Motor	Wind code	Nominal speed	Nominal power	Nominal torque	Maximum torque	Inertia	Nominal voltage	Nominal current	Nominal freq.	Maximum speed at Pn	Maximum speed	Weight
		nn [RPM]	Pn [kW]	Mn [Nm]	Mmax [Nm]	J [kgm²]	Vn [VRMS]	In [ARMS]	Fn [Hz]	n1 [RPM]	nmax [RPM]	W [kg]
80 S	E2	580	0,6	10,5	25	0,0060	400	1,4	19,3	1400	9000	23
	E1	1000	1,0	10,0	25	0,0060	400	2,2	33,3	2400	9000	23
	F1	1500	1,5	9,5	25	0,0060	400	3,3	50	3600	9000	23
	F2	1800	1,8	9,5	25	0,0060	400	3,9	60	4300	9000	23
	F3	2200	2,1	9,0	25	0,0060	400	4,5	73.3	5200	9000	23
	G1	2600	2,3	8,6	25	0,0060	400	5,0	86.6	6300	9000	23
80 M	E2	580	0,9	15,4	35	0,0076	400	2,1	19,3	1400	9000	27
	E1	1000	1,5	14,7	35	0,0076	400	3,2	33,3	2400	9000	27
	F1	1500	2,2	14,0	35	0,0076	400	4,7	50	3600	9000	27
	F2	1800	2,6	14,0	35	0,0076	400	5,6	60	4300	9000	27
	F3	2200	3,1	13,3	35	0,0076	400	6,5	73.3	5200	9000	27
	G1	2600	3,4	12,6	35	0,0076	400	7,3	86.6	6300	9000	27
80 L	E2	580	1,3	20,9	48	0,0102	400	2,8	19,3	1400	9000	31
	E1	1000	2,1	20,0	48	0,0102	400	4,2	33,3	2400	9000	31
	F1	1500	3,0	19,0	48	0,0102	400	6,3	50	3600	9000	31
	F2	1800	3,6	19,0	48	0,0102	400	7,5	60	4300	9000	31
	F3	2200	4,2	18,1	48	0,0102	400	8,7	86.6	5200	9000	31
	G1	2600	4,7	17,1	48	0,0102	400	9,8	73.3	6300	9000	31
80 P	E2	580	1,7	28,1	65	0,0137	400	3,7	19,3	1400	9000	37
	E1	1000	2,8	26,8	65	0,0137	400	5,6	33,3	2400	9000	37
	F1	1500	4,0	25,5	65	0,0137	400	8,3	50	3600	9000	37
	F2	1800	4,8	25,5	65	0,0137	400	10,0	60	4300	9000	37
	F3	2200	5,6	24,2	65	0,0137	400	11,6	73.3	5200	9000	37
	G1	2600	6,2	23,0	65	0,0137	400	12,9	86.6	6300	9000	37

Degree of protection: IP54
Cooling: IC416
Supply voltage from inverter: 3x400VRMS

SICME|ORANGE1

Motor	Wind code	Nominal speed	Nominal power	Nominal torque	Maximum torque	Inertia	Nominal voltage	Nominal current	Nominal freq.	Maximum speed at Pn	Maximum speed	Weight
		nn [RPM]	Pn [kW]	Mn [Nm]	Mmax [Nm]	J [kgm²]	Vn [VRMS]	In [ARMS]	Fn [Hz]	n1 [RPM]	nmax [RPM]	W [kg]
100 S	E2	1000	2,5	23,9	40	0,019	395	5,9	35,8	1200	8000	50
	E1	1200	3	23,8	40	0,019	395	6,9	42,4	1500	8000	50
	FA	1500	3,7	23,6	40	0,019	380	9	52,3	2600	8000	50
	F1	1750	4,3	23,5	40	0,019	395	10	60,7	2400	8000	50
	F2	2000	4,9	23,4	40	0,019	380	11,8	69	3400	8000	50
	F3	2400	5,7	22,7	40	0,019	395	13,3	82,2	3400	8000	50
	G2	3000	6,8	21,6	40	0,019	390	16,3	102,2	4700	8000	50
100 M	EA	1000	4,1	39,2	70	0,025	395	9,4	35,6	1200	8000	65
	E2	1200	4,9	38,8	70	0,025	400	11	42,1	1300	8000	65
	FB	1500	6	38,2	70	0,025	385	13,7	52,1	2400	8000	65
	F1	1750	6,9	37,7	70	0,025	400	15,2	60,5	1900	8000	65
	F3	2100	8,1	36,8	70	0,025	400	17,8	72	2500	8000	65
	G1	2700	10	35,4	70	0,025	400	21,9	92	3400	8000	65
	G2	3000	11	35	70	0,025	400	24,2	102,1	3600	8000	65
100 L	E2	1000	5,7	54,4	90	0,031	400	13	35,4	1200	8000	80
	E1	1250	7	53,5	90	0,031	400	15,7	43,7	1500	8000	80
	FC	1500	8,2	52,2	90	0,031	390	18,4	52	2300	8000	80
	F1	1800	9,6	50,9	90	0,031	400	21	62	2200	8000	80
	F2	1900	10	50,3	90	0,031	395	23,5	65,4	2700	8000	80
	GA	2400	12,2	48,5	90	0,031	400	27	82	2900	8000	80
	G1	2700	13,3	47	90	0,031	395	28,8	91,9	3900	8000	80
	G2	3000	14,5	46,2	90	0,031	390	32	101,9	5000	8000	80
100 P	EB	1000	6,9	66,2	110	0,037	395	15,1	35,3	1300	8000	90
	E2	1300	8,8	64,8	110	0,037	400	19,3	45,2	1500	8000	90
	FB	1500	10	63,7	110	0,037	380	23	51,8	3100	8000	90
	F1	1750	11,4	62,2	110	0,037	395	25	60,1	2600	8000	90
	F2	2000	12,8	61	110	0,037	400	27,3	68,6	2200	8000	90
	GA	2500	15,1	57,8	110	0,037	390	33	85	4400	8000	90
	G2	3000	17	54,1	110	0,037	400	36,8	101,6	3900	8000	90
132 K	EC	850	9,5	107	250	0,067	395	21	29,9	1400	7000	132
	EB	1000	11	105	250	0,067	385	24	34,9	2200	7000	132
	E5	1200	13	103	250	0,067	400	29	41,5	1900	7000	132
	FA	1500	16	102	250	0,067	390	34	51,6	2800	7000	132
	F2	1800	19	101	250	0,067	395	40	61,5	3100	7000	132
	F3	2000	21	100	250	0,067	395	43	68,1	3600	7000	132
	GA	2500	25	95	250	0,067	400	51	84,8	3400	7000	132
	GB	3000	29	92	250	0,067	395	60	101,4	5500	7000	132
132 S	E4	850	13	146	340	0,086	390	28	29,8	1600	7000	157
	EB	1000	15	143	340	0,086	395	31	34,7	1700	7000	157
	ED	1250	18	138	340	0,086	400	37	43	1700	7000	157
	FA	1500	21	134	340	0,086	400	42	51,4	1900	7000	157
	F2	1800	24	127	340	0,086	395	50	61,2	3400	7000	157
	F4	2100	27	123	340	0,086	390	55	71,2	4500	7000	157
	G1	2600	31	114	340	0,086	400	62	87,9	3700	7000	157
	GB	3000	34	108	340	0,086	395	71	101	6100	7000	157
132 M	E4	850	15	169	380	0,098	385	33	29,8	1800	7000	175
	E2	1000	17	162	380	0,098	400	35	34,8	1200	7000	175
	EB	1300	21	156	380	0,098	400	44	44,6	1900	7000	175
	FA	1500	24	153	380	0,098	395	48	51,3	2500	7000	175
	F2	1800	27	143	380	0,098	395	56	61,2	3400	7000	175
	F3	2100	30	136	380	0,098	390	63	71,2	4600	7000	175
	G1	2600	34	125	380	0,098	395	71	87,8	5200	7000	175
	G2	3000	37	118	380	0,098	400	75	101	4700	7000	175
132 P	E7	850	18	202	430	0,12	395	39	29,7	1300	7000	200
	E3	1000	21	201	430	0,12	400	44	34,7	1300	7000	200
	F4	1300	27	198	430	0,12	400	52	44,6	1700	7000	200
	FA	1500	30	191	430	0,12	400	58	51,2	2000	7000	200
	F1	1800	33	175	430	0,12	400	65	61,2	2400	7000	200
	F3	2100	36	164	430	0,12	390	73	71,1	4600	7000	200
	G1	2600	40	147	430	0,12	385	85	87,6	7000	7000	200
	G2	3000	43	137	430	0,12	390	93	100,9	7000	7000	200
132 X	E3	850	20	225	460	0,126	385	42	29,6	1900	7000	220
	E2	1000	23	220	460	0,126	400	46	34,5	1300	7000	220
	F3	1300	29	213	460	0,126	400	58	44,5	1800	7000	220
	FA	1500	33	210	460	0,126	390	67	51,2	3100	7000	220
	F1	1800	37	196	460	0,126	390	76	61,1	4100	7000	220
	F2	2100	40	182	460	0,126	400	80	71	3200	7000	220
	G1	2600	45	165	460	0,126	385	96	87,6	7000	7000	220
	G2	3000	47	150	460	0,126	380	106	100,8	7000	7000	220

Degree of protection: IP54
Cooling: IC416
Supply voltage from inverter: 3x400VRMS

SICME|ORANGE1

Motor	Wind code	Nominal speed	Nominal power	Nominal torque	Maximum torque	Inertia	Nominal voltage	Nominal current	Nominal freq.	Maximum speed at Pn	Maximum speed	Weight
		nn [RPM]	Pn [kW]	Mn [Nm]	Mmax [Nm]	J [kgm²]	Vn [VRMS]	In [ARMS]	Fn [Hz]	n1 [RPM]	nmax [RPM]	W [kg]
160 M	EB	650	19	279	750	0,24	395	35	23,1	1000	6000	255
	EC	850	24	270	750	0,24	400	43	29,6	1100	6000	255
	EA	1000	28	267	750	0,24	390	51	34,6	1900	6000	255
	E1	1300	35	257	750	0,24	400	61	44,6	1700	6000	255
	FC	1500	40	255	750	0,24	390	72	51,3	2900	6000	255
	F1	1800	45	239	750	0,24	400	79	61,2	2600	6000	255
	FE	2000	48	229	750	0,24	395	86	67,8	3600	6000	255
	F5	2250	51	216	750	0,24	390	93	76,1	5000	6000	255
	GB	2500	53	202	750	0,24	400	93	84,3	4100	6000	255
160 L	E6	650	23	338	940	0,302	395	45	23	1000	6000	310
	E4	850	29	326	940	0,302	390	57	29,6	1700	6000	310
	EA	1000	33	315	940	0,302	400	62	34,5	1200	6000	310
	E3	1300	41	301	940	0,302	395	78	44,5	2300	6000	310
	FB	1500	46	293	940	0,302	400	85	51,2	2000	6000	310
	F1	1750	50	273	940	0,302	395	96	59,4	3400	6000	310
	F2	1950	53	260	940	0,302	400	100	66	2800	6000	310
	FA	2250	57	242	940	0,302	400	110	75,9	3700	6000	310
	G2	2500	59	225	940	0,302	400	114	84,2	4200	6000	310
160 P	E5	650	27	397	1100	0,36	395	53	23	1100	5000	350
	E8	850	34	382	1100	0,36	400	65	29,5	1200	5000	350
	EA	1000	39	372	1100	0,36	395	75	34,5	1900	5000	350
	E2	1250	47	359	1100	0,36	390	90	42,8	2800	5000	350
	FA	1500	53	337	1100	0,36	400	98	51,1	2300	5000	350
	F2	1800	60	318	1100	0,36	390	116	61	4600	5000	350
	FB	2000	63	301	1100	0,36	395	122	67,6	4500	5000	350
	FC	2250	66	280	1100	0,36	400	127	75,9	4200	5000	350
	G1	2500	67	256	1100	0,36	395	133	84,1	5000	5000	350
160 X	E4	650	30	441	1200	0,39	395	58	22,9	1100	4500	395
	E5	850	38	427	1200	0,39	390	74	29,5	1800	4500	395
	EA	1000	43	411	1200	0,39	395	82	34,4	2000	4500	395
	FB	1300	54	397	1200	0,39	400	101	44,4	2100	4500	395
	FA	1500	60	382	1200	0,39	395	114	51	3100	4500	395
	F1	1800	66	350	1200	0,39	395	126	61	3900	4500	395
	F2	2000	70	334	1200	0,39	400	133	67,6	3600	4500	395
	FC	2250	72	306	1200	0,39	400	139	75,8	4300	4500	395
	G1	2500	73	279	1200	0,39	395	146	84,1	4500	4500	395
180 K	EB	580	23	379	1000	0.490	390	51	20.2	800	4500	390
	E2	1000	39	372	1000	0.490	395	79	34.2	1300	4500	390
	FA	1450	54	356	1000	0.490	390	108	49.1	2300	4500	390
	F1	1800	65	345	1000	0.490	395	125	60.8	2500	4500	390
	GA	2200	75	326	1000	0.490	390	148	74.0	3800	4500	390
	G1	2450	80	312	1000	0.490	395	157	82.3	3700	4500	390
180 S	EC	580	28	461	1250	0.590	375	62	20.2	1200	4500	435
	E2	1000	47	449	1250	0.590	385	95	34.2	1800	4500	435
	FA	1500	67	427	1250	0.590	395	127	50.8	2200	4500	435
	F2	1800	77	408	1250	0.590	385	151	60.7	3600	4500	435
	F4	2200	88	382	1250	0.590	390	172	74.0	4200	4500	435
	G2	2500	94	359	1250	0.590	395	184	84.0	4200	4500	435
180 M	EB	580	33	543	1500	0.690	395	68	20.2	800	4500	480
	E2	1000	55	525	1500	0.690	385	111	34.2	2000	4500	480
	FA	1500	79	503	1500	0.690	375	158	50.8	3700	4500	480
	F1	1750	88	480	1500	0.690	400	167	59.1	2100	4500	480
	F3	2200	101	438	1500	0.690	400	191	74.0	2700	4500	480
	G1	2450	107	417	1500	0.690	400	206	82.3	3300	4500	480
180 L	EB	580	38	626	1700	0.810	390	80	20.2	1000	4500	535
	E2	1000	64	611	1700	0.810	395	124	34.2	1600	4500	535
	FA	1500	92	586	1700	0.810	400	171	50.8	1800	4500	535
	F1	1800	105	557	1700	0.810	390	200	60.8	3700	4500	535
	F2	2100	114	518	1700	0.810	400	214	70.7	2800	4500	535
	G1	2400	120	477	1700	0.810	400	230	80.7	3400	4500	535
180 P	EB	580	43	708	1900	0.920	390	89	20.2	1100	4500	580
	E2	1000	73	697	1900	0.920	395	141	34.2	1600	4500	580
	FA	1500	105	668	1900	0.920	375	207	50.8	4300	4500	580
	F1	1800	119	631	1900	0.920	395	222	60.7	3300	4500	580
	F2	2100	129	587	1900	0.920	400	240	70.7	2900	4500	580
	GA	2450	133	518	1900	0.920	400	257	82.3	3800	4500	580

Degree of protection: IP54
Cooling: IC416
Supply voltage from inverter: 3x400VRMS

SICME|ORANGE1

PVAP VENTILATION

Motor	Wind code	Nominal speed	Nominal power	Nominal torque	Maximum torque	Inertia	Nominal voltage	Nominal current	Nominal freq.	Maximum speed at Pn	Maximum speed	Weight
		nn [RPM]	Pn [kW]	Mn [Nm]	Mmax [Nm]	J [kgm²]	Vn [VRMS]	In [ARMS]	Fn [Hz]	n1 [RPM]	nmax [RPM]	W [kg]
180 K	EB	580	20	329	1000	0.490	380	46	20.1	1100	4500	380
	E2	100	34	325	1000	0.490	390	71	34.1	1600	4500	380
	FA	1500	49	312	1000	0.490	400	96	50.7	1800	4500	380
	F1	1800	57	302	1000	0.490	395	112	60.7	2800	4500	380
	GA	2200	66	286	1000	0.490	385	135	74.0	4500	4500	380
	G1	2450	70	273	1000	0.490	390	142	82.3	4500	4500	380
180 S	EF	580	24	395	1250	0.590	390	52	20.1	1000	4500	425
	E6	1000	41	392	1250	0.590	395	82	34.1	1500	4500	425
	FA	1500	59	376	1250	0.590	395	114	50.7	2400	4500	425
	F2	1800	68	361	1250	0.590	380	138	60.7	4400	4500	425
	F4	2200	77	334	1250	0.590	385	157	73.9	4500	4500	425
	G2	2500	82	313	1250	0.590	390	166	83.9	4500	4500	425
180 M	EB	580	29	477	1500	0.690	390	61	20.1	1000	4500	470
	E2	1000	48	458	1500	0.690	380	99	34.1	2400	4500	470
	FB	1500	69	439	1500	0.690	395	133	50.7	2500	4500	470
	F1	1750	77	420	1500	0.690	395	149	59.0	3100	4500	470
	F3	2200	91	395	1500	0.690	400	175	74.0	3000	4500	470
	G1	2450	97	378	1500	0.690	400	190	82.3	3600	4500	470
180 L	EB	580	33	543	1700	0.810	380	71	20.1	1400	4500	525
	E2	1000	56	535	1700	0.810	390	111	34.1	2000	4500	525
	FA	1500	81	516	1700	0.810	395	155	50.7	2700	4500	525
	F1	1800	92	488	1700	0.810	390	180	60.7	4100	4500	525
	F2	2100	100	455	1700	0.810	400	193	70.6	3200	4500	525
	G1	2400	105	418	1700	0.810	400	207	80.6	3900	4500	525
180 P	EB	580	38	626	1900	0.920	385	81	20.1	1300	4500	570
	E2	1000	64	611	1900	0.920	390	126	34.1	2200	4500	570
	FA	1550	94	579	1900	0.920	385	184	52.3	4100	4500	570
	F1	1800	105	557	1900	0.920	395	200	60.6	3700	4500	570
	F2	2100	112	509	1900	0.920	400	215	70.6	3300	4500	570
	GA	2450	117	456	1900	0.920	400	233	82.2	4300	4500	570
225 S	E7	650	46	676	1670	1,05	395	87	22,4	900	3500	675
	EC	850	58	652	1670	1,05	400	109	29	1100	3500	675
	EA	1000	67	640	1670	1,05	400	125	34	1300	3500	675
	FB	1300	82	602	1670	1,05	395	157	43,9	2400	3500	675
	FA	1500	93	592	1670	1,05	390	178	50,6	3100	3500	675
	F1	1800	105	557	1670	1,05	395	200	60,5	3500	3500	675
	F2	2100	116	527	1670	1,05	400	213	70,5	2900	3500	675
225 L	E3	650	64	940	2230	1,5	385	125	22,3	1400	3500	860
	E6	850	81	910	2230	1,5	400	150	29	1100	3500	860
	EC	1000	94	898	2230	1,5	385	178	33,9	2400	3500	860
	E2	1300	116	852	2230	1,5	390	219	43,9	2800	3500	860
	FA	1500	130	828	2230	1,5	400	235	50,6	2100	3500	860
	F1	1800	142	753	2230	1,5	390	273	60,5	3500	3500	860
225 X	E3	650	92	1352	3270	2,13	385	175	22,4	1600	3500	1080
	E4	850	117	1314	3270	2,13	395	214	29	1500	3500	1080
	EB	1000	135	1289	3270	2,13	385	252	34	2500	3500	1080
	E1	1300	166	1220	3270	2,13	400	300	44	1800	3500	1080
	FA	1500	184	1172	3270	2,13	400	333	50,6	2100	3500	1080
	F1	1750	202	1102	3270	2,13	395	371	58,9	3500	3500	1080
280 M	EA	730	143	1870	4710	3,933	400	247	24,8	900	3000	1290
	E1	880	169	1834	4710	3,933	400	291	29,8	1100	3000	1290
	E2	1100	207	1797	4710	3,933	400	356	37,1	1400	3000	1290
	F1	1500	270	1719	4710	3,933	400	461	50,4	1900	3000	1290
280 L	EA	590	140	2266	5660	4,725	400	244	20,1	700	3000	1520
	E1	720	168	2228	5660	4,725	400	291	24,4	900	3000	1520
	E2	900	206	2186	5660	4,725	400	356	30,4	1200	3000	1520
	F1	1200	264	2101	5660	4,725	395	460	40,4	2100	3000	1520
280 X	EA	490	127	2475	6110	5,682	400	232	16,8	650	2800	1890
	E1	600	153	2435	6110	5,682	400	277	20,4	750	2800	1890
	E2	760	191	2400	6110	5,682	400	342	25,8	1000	2800	1890
	F1	1020	248	2322	6110	5,682	400	444	34,4	1400	2800	1890
	F2	1540	342	2121	6110	5,682	400	617	51,7	2200	2800	1890

Degree of protection: IP54
Cooling: IC416
Supply voltage from inverter: 3x400VRMS

SICME|ORANGE1

Motor	Wind code	Nominal speed	Nominal power	Nominal torque	Maximum torque	Inertia	Nominal voltage	Nominal current	Nominal freq.	Maximum speed at Pn	Maximum speed	Weight
		nn [RPM]	Pn [kW]	Mn [Nm]	Mmax [Nm]	J [kgm²]	Vn [VRMS]	In [ARMS]	Fn [Hz]	n1 [RPM]	nmax [RPM]	W [kg]
315 M	G7	580	165	2718	4000	6,05	400	290	19,3	1400	2600	1600
	H7	1000	260	2484	4000	6,05	400	433	33,3	2000	2600	1600
	F6	1500	320	2038	4000	6,05	400	518	50	2000	2600	1600
	E7	1800	360	1911	4000	6,05	400	580	60	2000	2600	1600
315 L	M7	580	200	3295	5000	7,26	400	358	19,3	1400	2600	1920
	F6	1000	315	3010	5000	7,26	400	535	33,3	2000	2600	1920
	D7	1500	400	2548	5000	7,26	400	618	50	2000	2600	1920
	C7	1800	450	2389	5000	7,26	400	728	60	2000	2600	1920
315 P	L7	580	235	3871	6000	9,69	400	391	19,3	1400	2600	2560
	E7	1000	390	3726	6000	9,69	400	635	33,3	2000	2600	2560
	C7	1500	500	3185	6000	9,69	400	802	50	2000	2600	2560
	B6	1800	580	3079	6000	9,69	400	930	60	2000	2600	2560
315 X	G7	580	295	4860	7000	11,25	400	507	19,3	1400	2600	2945
	D7	1000	450	4300	7000	11,25	400	671	33,3	2000	2600	2945
	B6	1500	620	3631	7000	11,25	400	1000	50	2000	2600	2945
	B5	1800	680	3610	7000	11,25	400	1100	60	2000	2600	2945
355 S	H2	500	175	3348	5000	24,5	400	323	25	1500	2200	2300
	I3	750	258	3283	5000	24,5	400	468	37,5	2200	2200	2300
	G1	1000	340	3250	5000	24,5	400	599	50	2200	2200	2300
	F2	1250	417	3185	5000	24,5	400	734	62,5	2200	2200	2300
	D2	1500	485	3088	5000	24,5	400	853	75	2200	2200	2300
	D3	1800	557	2958	5000	24,5	400	980	90	2200	2200	2300
355 M	I2	500	198	3782	6000	28,5	400	365	25	1500	2200	2700
	F2	750	291	3709	6000	28,5	400	528	37,5	2200	2200	2700
	E3	1000	385	3672	6000	28,5	400	677	50	2200	2200	2700
	D1	1250	471	3599	6000	28,5	400	829	62,5	2200	2200	2700
	C3	1500	548	3488	6000	28,5	400	963	75	2200	2200	2700
	C1	1800	630	3342	6000	28,5	400	1107	90	2200	2200	2700
355 L	F2	500	232	4429	7000	32,5	400	427	25	1500	2200	3100
	E2	750	341	4343	7000	32,5	400	618	37,5	2200	2200	3100
	E4	1000	450	4300	7000	32,5	400	791	50	2200	2200	3100
	D1	1250	552	4214	7000	32,5	400	969	62,5	2200	2200	3100
	D3	1500	642	4085	7000	32,5	400	1128	75	2200	2200	3100
	C3	1800	738	3913	7000	32,5	400	1297	90	2200	2200	3100
355 P	D3	500	261	4984	8000	36,5	400	480	25	1500	2200	3500
	C2	750	383	4887	8000	36,5	400	695	37,5	2200	2200	3500
	B1	1000	506	4839	8000	36,5	400	889	50	2200	2200	3500
	B3	1250	621	4742	8000	36,5	400	1090	62,5	2200	2200	3500
	A1	1500	720	4585	8000	36,5	400	1269	75	2200	2200	3500
	A3	1800	823	4365	8000	36,5	400	1460	90	2200	2200	3500

Degree of protection: IP54
Cooling: IC416
Supply voltage from inverter: 3x690VRMS

SICME|ORANGE1

Motor	Wind code	Nominal speed	Nominal power	Nominal torque	Maximum torque	Inertia	Nominal voltage	Nominal current	Nominal freq.	Maximum speed at Pn	Maximum speed	Weight
		nn [RPM]	Pn [kW]	Mn [Nm]	Mmax [Nm]	J [kgm²]	Vn [VRMS]	In [ARMS]	Fn [Hz]	n1 [RPM]	nmax [RPM]	W [kg]
355 S	Q3	500	168	3210	5000	24,5	690	180	25	1500	2200	2300
	P2	750	249	3172	5000	24,5	690	262	37,5	2200	2200	2300
	N3	1000	328	3134	5000	24,5	690	335	50	2200	2200	2300
	L1	1250	402	3072	5000	24,5	690	410	62,5	2200	2200	2300
	M1	1500	468	2981	5000	24,5	690	478	75	2200	2200	2300
	M3	1800	538	2855	5000	24,5	690	549	90	2200	2200	2300
355 M	Q1	500	189	3611	6000	28,5	690	202	25	1500	2200	2700
	P2	750	278	3541	6000	28,5	690	293	37,5	2200	2200	2700
	N3	1000	367	3506	6000	28,5	690	375	50	2200	2200	2700
	M2	1250	450	3439	6000	28,5	690	459	62,5	2200	2200	2700
	L1	1500	524	3338	6000	28,5	690	535	75	2200	2200	2700
	L3	1800	602	3195	6000	28,5	690	614	90	2200	2200	2700
355 L	P3	500	225	4300	7000	32,5	690	240	25	1500	2200	3100
	N2	750	330	4204	7000	32,5	690	347	37,5	2200	2200	3100
	L2	1000	436	4166	7000	32,5	690	445	50	2200	2200	3100
	H2	1250	535	4089	7000	32,5	690	545	62,5	2200	2200	3100
	G1	1500	622	3962	7000	32,5	690	634	75	2200	2200	3100
	G3	1800	715	3795	7000	32,5	690	729	90	2200	2200	3100
355 P	N1	500	253	4831	8000	36,5	690	270	25	1500	2200	3500
	L3	750	372	4737	8000	36,5	690	390	37,5	2200	2200	3500
	H2	1000	491	4690	8000	36,5	690	500	50	2200	2200	3500
	F2	1250	602	4596	8000	36,5	690	615	62,5	2200	2200	3500
	E1	1500	698	4444	8000	36,5	690	713	75	2200	2200	3500
	E3	1800	797	4230	8000	36,5	690	820	90	2200	2200	3500
400 S	O2	500	275	5144	10000	48	690	291	25	1500	2200	3700
	H1	750	404	5144	10000	48	690	416	37,5	2200	2200	3700
	F1	1000	533	5093	10000	48	690	529	50	2200	2200	3700
	E1	1250	653	4991	10000	48	690	645	62,5	2200	2200	3700
	D1	1500	758	4826	10000	48	690	747	75	2200	2200	3700
	C1	1800	866	4594	10000	48	690	853	90	2200	2200	3700
400 M	M3	500	309	5791	12000	54	690	327	25	1500	2200	4200
	G2	750	455	5791	12000	54	690	468	37,5	2200	2200	4200
	E1	1000	600	5733	12000	54	690	595	50	2200	2200	4200
	D1	1250	735	5619	12000	54	690	726	62,5	2200	2200	4200
	C1	1500	853	5432	12000	54	690	841	75	2200	2200	4200
	B1	1800	975	5171	12000	54	690	961	90	2200	2200	4200
400 L	I1	500	343	6430	14000	60	690	363	25	1500	2200	4700
	F3	750	505	6430	14000	60	690	519	37,5	2200	2200	4700
	L1	1000	667	6367	14000	60	690	660	50	2200	2200	4700
	H1	1250	817	6239	14000	60	690	806	62,5	2200	2200	4700
	F1	1500	948	6032	14000	60	690	934	75	2200	2200	4700
	E2	1800	1082	5743	14000	60	690	1067	90	2200	2200	4700
450 S	N3	500	378	7070	15000	67	690	397	25	1500	2200	5000
	M2	750	555	7070	15000	67	690	569	37,5	2200	2200	5000
	L1	1000	733	7000	15000	67	690	724	50	2200	2200	5000
	H3	1250	898	6860	15000	67	690	886	62,5	2200	2200	5000
	G2	1500	1042	6633	15000	67	690	1027	75	2200	2200	5000
	G4	1800	1190	6314	15000	67	690	1173	90	2200	2200	5000
450 M	M2	500	430	8046	17000	76	690	452	25	1500	2200	5630
	L3	750	632	8046	17000	76	690	647	37,5	2200	2200	5630
	G1	1000	834	7967	17000	76	690	823	50	2200	2200	5630
	G3	1250	1022	7807	17000	76	690	1008	62,5	2200	2200	5630
	F1	1500	1186	7548	17000	76	690	1168	75	2200	2200	5630
	F3	1800	1355	7186	17000	76	690	1335	90	2200	2200	5630
450 L	L3	500	515	9642	19000	88	690	541	25	1500	2200	6560
	G1	750	757	9642	19000	88	690	774	37,5	2200	2200	6560
	G3	1000	1000	9547	19000	88	690	986	50	2200	2200	6560
	F1	1250	1225	9356	19000	88	690	1208	62,5	2200	2200	6560
	F3	1500	1421	9045	19000	88	690	1400	75	2200	2200	6560
	E1	1800	1623	8611	19000	88	690	1600	90	2200	2200	6560

Degree of protection: IP54
Cooling: IC416
Supply voltage from inverter: 3x690VRMS

Motor	Wind code	Nominal speed	Nominal power	Nominal torque	Maximum torque	Inertia	Nominal voltage	Nominal current	Nominal freq.	Maximum speed at Pn	Maximum speed	Weight
		nn [RPM]	Pn [kW]	Mn [Nm]	Mmax [Nm]	J [kgm²]	Vn [VRMS]	In [ARMS]	Fn [Hz]	n1 [RPM]	nmax [RPM]	W [kg]
500 S	T2	500	601	11255	23000	119	690	629	25	1500	2000	7350
	R3	750	884	11255	23000	119	690	901	37,5	2000	2000	7350
	N2	1000	1167	11143	23000	119	690	1151	50	2000	2000	7350
	M1	1250	1429	10920	23000	119	690	1410	62,5	2000	2000	7350
	M3	1500	1658	10558	23000	119	690	1634	75	2000	2000	7350
	L2	1800	1895	10051	23000	119	690	1867	90	2000	2000	7350
500 M	S2	500	687	12861	26000	138	690	718	25	1500	2000	8500
	R1	750	1010	12861	26000	138	690	1028	37,5	2000	2000	8500
	Q3	1000	1333	12733	26000	138	690	1314	50	2000	2000	8500
	P1	1250	1633	12479	26000	138	690	1611	62,5	2000	2000	8500
	P3	1500	1895	12065	26000	138	690	1868	75	2000	2000	8500
	N1	1800	2165	11485	26000	138	690	2133	90	2000	2000	8500
500 L	R1	500	773	14470	29000	157	690	807	25	1500	2000	9650
	Q3	750	1136	14470	29000	157	690	1155	37,5	2000	2000	9650
	P2	1000	1500	14327	29000	157	690	1478	50	2000	2000	9650
	M1	1250	1838	14040	29000	157	690	1813	62,5	2000	2000	9650
	M3	1500	2132	13575	29000	157	690	2010	75	2000	2000	9650
	L2	1800	2436	12923	29000	157	690	2400	90	2000	2000	9650

Degree of protection: IP23
Cooling: IC06
Supply voltage from inverter: 3x360VRMS

Motor	Wind code	Nominal speed	Nominal power	Nominal torque	Maximum torque	Inertia	Nominal voltage	Nominal current	Nominal freq.	Maximum speed at Pn	Maximum speed	Weight
		nn [RPM]	Pn [kW]	Mn [Nm]	Mmax [Nm]	J [kgm²]	Vn [VRMS]	In [ARMS]	Fn [Hz]	n1 [RPM]	nmax [RPM]	W [kg]
80 S	E4	500	0.7	15	30	0,0060	345	2,2	19,3	820	9000	23
	E3	850	1.2	14	30	0,0060	340	3,4	33,3	1360	9000	23
	F4	1250	1.8	14	30	0,0060	335	4,7	50	2000	9000	23
	F5	1500	2.	14	30	0,0060	335	5,6	60	2420	9000	23
	F6	1800	2.4	13	30	0,0060	330	6,5	73.3	2950	9000	23
	G2	2200	2.8	12.3	30	0,0060	340	7,3	86.6	3550	9000	23
80 M	E4	500	1.1	21	40	0,0076	345	3,1	19,3	820	9000	27
	E3	850	1.7	20	40	0,0076	340	4,6	33,3	1360	9000	27
	F4	1250	2.4	19	40	0,0076	335	6,4	50	2000	9000	27
	F5	1500	2.9	19	40	0,0076	335	7,6	60	2420	9000	27
	F6	1800	3.3	18	40	0,0076	330	8,9	73.3	2950	9000	27
	G2	2200	3.9	17	40	0,0076	340	9,9	86.6	3550	9000	27
80 L	E4	500	1.4	28	55	0,0102	345	4,0	19,3	820	9000	31
	E3	850	2.	27	55	0,0102	340	6,1	33,3	1360	9000	31
	F4	1250	3.4	26	55	0,0102	335	8,5	50	2000	9000	31
	F5	1500	4.0	26	55	0,0102	335	10,1	60	2420	9000	31
	F6	1800	4.5	24	55	0,0102	330	11,7	73.3	2950	9000	31
	G2	2200	5.3	23	55	0,0102	340	13,1	86.6	3550	9000	31
80 P	E4	500	2.0	39	80	0,0137	345	5,5	19,3	820	9000	37
	E3	850	3.2	37	80	0,0137	340	8,3	33,3	1360	9000	37
	F4	1250	4.5	35	80	0,0137	335	11,5	50	2000	9000	37
	F5	1500	5.5	35	80	0,0137	335	13,7	60	2420	9000	37
	F6	1800	6.2	33	80	0,0137	330	15,9	73.3	2950	9000	37
	G2	2200	7.3	32	80	0,0137	340	17,7	86.6	3550	9000	37

Motor	Wind code	Nominal speed	Nominal power	Nominal torque	Maximum torque	Inertia	Nominal voltage	Nominal current	Nominal freq.	Maximum speed at Pn	Maximum speed	Weight
		nn [RPM]	Pn [kW]	Mn [Nm]	Mmax [Nm]	J [kgm²]	Vn [VRMS]	In [ARMS]	Fn [Hz]	n1 [RPM]	nmax [RPM]	W [kg]
100 S	E1	850	4.5	50	110	0,0229	340	11,1	28,3	1360	7500	44
	F1	1250	6.3	48	110	0,0229	340	15,3	41,7	2000	7500	44
	F2	1500	7.5	48	110	0,0229	335	18,4	50	2400	7500	44
	F3	1800	8.5	45	110	0,0229	330	21,3	60	2880	7500	44
	G1	2200	9.9	43	110	0,0229	340	23,8	73,3	3520	7500	44
100 M	E1	850	6.6	74	150	0,0298	340	16,1	28,3	1360	7500	53
	F1	1250	9.2	70	150	0,0298	340	22,4	41,7	2000	7500	53
	F2	1500	11	70	150	0,0298	335	26,8	50	2400	7500	53
	F3	1800	12.6	67	150	0,0298	330	31	60	2880	7500	53
	G1	2200	14.5	63	150	0,0298	340	34,6	73,3	3520	7500	53
100 L	E1	850	7.7	87	180	0,035	340	19,1	28,3	1360	7500	60
	F1	1250	10.9	83	180	0,035	340	26,5	41,7	2000	7500	60
	F2	1500	13	83	180	0,035	335	31,7	50	2400	7500	60
	F3	1800	14.9	79	180	0,035	330	36,8	60	2880	7500	60
	G1	2200	17.3	75	180	0,035	340	41,1	73,3	3520	7500	60
100 P	E1	850	8.9	100	210	0,0418	340	21,7	28,3	1360	7500	70
	F1	1250	12.6	96	210	0,0418	340	30,1	41,7	2000	7500	70
	F2	1500	15.1	96	210	0,0418	335	36,1	50	2400	7500	70
	F3	1800	17.2	91	210	0,0418	330	41,8	60	2880	7500	70
	G1	2200	19.8	86	210	0,0418	340	46,7	73,3	3520	7500	70
100 X	E1	850	11	124	260	0,0556	340	26,9	28,3	1360	7500	82
	F1	1250	15.4	118	260	0,0556	340	37,2	41,7	2000	7500	82
	F2	1500	18.5	118	260	0,0556	335	44,6	50	2400	7500	82
	F3	1800	21.1	112	260	0,0556	330	51,6	60	2880	7500	82
	G1	2200	24.4	106	260	0,0556	340	57,7	73,3	3520	7500	82
132 K	EB	850	14	157	250	0,067	345	33	30,7	1400	7000	132
	E5	1000	16	153	250	0,067	340	38	35,5	1900	7000	132
	F4	1300	20	149	250	0,067	345	48	45,5	2200	7000	132
	F2	1500	23	146	250	0,067	340	53	52,1	2900	7000	132
	FB	1800	27	143	250	0,067	345	61	62,1	3200	7000	132
	GA	2000	30	142	250	0,067	340	69	68,8	3900	7000	132
	GB	2500	36	138	250	0,067	340	80	85,3	5100	7000	132
	H1	3000	42	134	250	0,067	340	93	101,9	6200	7000	132
132 S	EC	900	20	212	340	0,086	345	46	32	1500	7000	157
	ED	1000	22	210	340	0,086	340	52	35,3	1800	7000	157
	FB	1250	27	206	340	0,086	345	61	43,6	2200	7000	157
	F2	1500	31	197	340	0,086	340	70	51,8	2900	7000	157
	F4	1800	35	186	340	0,086	345	78	61,8	3200	7000	157
	G1	2050	39	182	340	0,086	345	88	70	4000	7000	157
	GB	2500	44	168	340	0,086	345	99	84,9	5100	7000	157
	H2	3000	49	156	340	0,086	325	116	101,5	7000	7000	157
132 M	E3	850	21	236	380	0,098	340	50	30,3	1600	7000	175
	EA	1000	24	229	380	0,098	340	56	35,2	1900	7000	175
	FB	1300	30	220	380	0,098	345	68	45,1	2400	7000	175
	F2	1500	34	216	380	0,098	345	77	51,8	2800	7000	175
	F3	1800	39	207	380	0,098	345	86	61,7	3400	7000	175
	GA	1950	41	201	380	0,098	345	92	66,7	3900	7000	175
	G2	2450	47	183	380	0,098	345	104	83,2	5100	7000	175
	H2	3000	52	166	380	0,098	330	123	101,3	7000	7000	175
132 P	ED	850	24	270	430	0,12	340	57	30	1700	7000	200
	E1	1000	28	267	430	0,12	345	64	35,1	1800	7000	200
	FB	1300	35	257	430	0,12	340	79	44,9	2800	7000	200
	F2	1550	40	246	430	0,12	340	91	53,2	3500	7000	200
	F3	1800	44	233	430	0,12	345	97	61,5	3600	7000	200
	GA	2000	47	224	430	0,12	345	104	68,1	4100	7000	200
	G2	2550	53	198	430	0,12	345	121	86,2	6200	7000	200
	H1	3000	57	181	430	0,12	340	131	101,1	7000	7000	200
132 X	E2	800	24	286	460	0,126	340	57	28,2	1700	7000	220
	E1	1000	29	277	460	0,126	340	67	34,9	2100	7000	220
	FA	1300	37	272	460	0,126	345	82	44,8	2500	7000	220
	F1	1500	42	267	460	0,126	335	97	51,4	3800	7000	220
	F2	1750	46	251	460	0,126	345	102	59,7	3800	7000	220
	GA	2000	50	239	460	0,126	345	111	68	4400	7000	220
	G2	2500	55	210	460	0,126	320	134	84,5	7000	7000	220
	H1	3000	60	191	460	0,126	320	150	101	7000	7000	220

Degree of protection: IP23
Cooling: IC06
Supply voltage from inverter: 3x360VRMS

SICME|ORANGE1

Motor	Wind code	Nominal speed	Nominal power	Nominal torque	Maximum torque	Inertia	Nominal voltage	Nominal current	Nominal freq.	Maximum speed at Pn	Maximum speed	Weight
		nn [RPM]	Pn [kW]	Mn [Nm]	Mmax [Nm]	J [kgm²]	Vn [VRMS]	In [ARMS]	Fn [Hz]	n1 [RPM]	nmax [RPM]	W [kg]
160 M	E2	650	32	470	750	0,24	345	78	24	1000	6000	270
	E8	850	41	461	750	0,24	340	98	30,5	1500	6000	270
	E5	1000	47	449	750	0,24	345	109	35,5	1600	6000	270
	FA	1250	58	443	750	0,24	340	132	43,8	2300	6000	270
	FE	1500	68	433	750	0,24	340	152	52,1	2700	6000	270
	GB	1800	79	419	750	0,24	335	178	61,9	3700	6000	270
	G1	2000	85	406	750	0,24	340	188	68,6	3900	6000	270
	GA	2450	97	378	750	0,24	345	209	83,5	4600	6000	270
160 L	EB	650	40	588	940	0,302	340	96	23,7	1200	6000	325
	E1	850	51	573	940	0,302	340	119	30,2	1700	6000	325
	F5	1000	59	563	940	0,302	340	135	35,2	2000	6000	325
	F4	1250	72	550	940	0,302	345	157	43,5	2300	6000	325
	F3	1500	83	528	940	0,302	335	186	51,7	3400	6000	325
	FA	1700	91	511	940	0,302	345	196	58,4	3300	6000	325
	G1	2100	106	482	940	0,302	345	225	71,6	4200	6000	325
	G3	2600	118	433	940	0,302	340	256	88,1	6000	6000	325
160 P	E9	650	47	690	1100	0,36	345	109	23,5	1200	5000	365
	E4	850	60	674	1100	0,36	345	134	30,1	1600	5000	365
	ED	1000	69	659	1100	0,36	335	156	35,1	2300	5000	365
	F1	1300	86	632	1100	0,36	345	185	45	2600	5000	365
	FB	1500	96	611	1100	0,36	335	212	51,6	3700	5000	365
	FC	1750	107	584	1100	0,36	345	226	59,9	3600	5000	365
	G1	1950	115	563	1100	0,36	345	242	66,5	4200	5000	365
	H1	2500	129	493	1100	0,36	345	276	84,6	5000	5000	365
160 X	E5	650	51	749	1200	0,39	345	118	23,5	1200	4500	395
	E1	850	65	730	1200	0,39	345	146	30	1700	4500	395
	FB	1000	75	716	1200	0,39	345	164	35,1	1900	4500	395
	F3	1250	90	688	1200	0,39	345	195	43,2	2700	4500	395
	F2	1500	104	662	1200	0,39	340	226	51,5	3600	4500	395
	FC	1700	113	635	1200	0,39	340	243	58,1	4100	4500	395
	G1	1950	123	602	1200	0,39	345	260	66,4	4500	4500	395
	G2	2250	131	556	1200	0,39	345	279	76,3	4500	4500	395
	G3	2500	135	516	1200	0,39	325	306	84,5	4500	4500	395
180 K	EC	580	37	609	1000	0.490	345	95	20.7	750	4500	390
	E3	1000	63	602	1000	0.490	345	148	34.7	1300	4500	390
	F3	1500	93	592	1000	0.490	335	216	51.3	2300	4500	390
	GA	1800	110	584	1000	0.490	340	246	61.3	2600	4500	390
	G2	2200	131	569	1000	0.490	345	287	74.5	3000	4500	390
	G3	2500	145	554	1000	0.490	345	315	84.6	3500	4500	390
180 S	EC	580	44	724	1250	0.590	335	113	20.7	900	4500	435
	E3	1000	75	716	1250	0.590	345	170	34.7	1400	4500	435
	F2	1500	109	694	1250	0.590	340	242	51.3	2300	4500	435
	F4	1800	127	674	1250	0.590	335	280	61.2	3100	4500	435
	G3	2300	151	627	1250	0.590	335	328	77.8	4200	4500	435
	GA	2700	163	576	1250	0.590	340	352	91.1	4500	4500	435
180 M	EC	580	50	823	1500	0.690	340	123	20.7	900	4500	480
	E3	1000	85	812	1500	0.690	335	195	34.6	1800	4500	480
	F2	1550	125	770	1500	0.690	335	273	52.9	2900	4500	480
	F3	1800	141	748	1500	0.690	345	294	61.2	2900	4500	480
	G2	2250	162	688	1500	0.690	335	349	76.0	4500	4500	480
	GA	2600	171	628	1500	0.690	325	380	87.7	4500	4500	480
180 L	EC	580	58	955	1700	0.810	345	137	20.7	900	4500	535
	E3	1000	97	926	1700	0.810	335	221	34.6	1900	4500	535
	F1	1500	138	879	1700	0.810	340	295	51.2	2800	4500	535
	G1	1900	162	814	1700	0.810	330	353	64.4	4500	4500	535
	G2	2250	176	747	1700	0.810	330	382	76.0	4500	4500	535
	G3	2600	182	668	1700	0.810	315	417	87.6	4500	4500	535
180 P	EC	580	65	1070	1900	0.920	340	155	20.7	1000	4500	580
	E3	1000	108	1031	1900	0.920	325	249	34.6	2400	4500	580
	F1	1500	153	974	1900	0.920	345	320	51.1	2800	4500	580
	F2	1750	170	928	1900	0.920	345	351	59.4	3300	4500	580
	GA	2050	185	862	1900	0.920	345	383	69.3	4200	4500	580
	G2	2500	194	741	1900	0.920	345	406	84.2	4500	4500	580

Degree of protection: IP23
Cooling: IC06
Supply voltage from inverter: 3x360VRMS

Motor	Wind code	Nominal speed	Nominal power	Nominal torque	Maximum torque	Inertia	Nominal voltage	Nominal current	Nominal freq.	Maximum speed at Pn	Maximum speed	Weight
		nn [RPM]	Pn [kW]	Mn [Nm]	Mmax [Nm]	J [kgm²]	Vn [VRMS]	In [ARMS]	Fn [Hz]	n1 [RPM]	nmax [RPM]	W [kg]
225 S	E3	650	71	1043	1670	1,05	345	158	22,7	1000	3500	640
	EA	800	86	1027	1670	1,05	345	187	27,7	1200	3500	640
	E1	1000	104	993	1670	1,05	340	224	34,3	1800	3500	640
	FA	1250	124	947	1670	1,05	340	268	42,6	2300	3500	640
	F1	1500	144	917	1670	1,05	340	310	50,9	2800	3500	640
	F3	1850	166	857	1670	1,05	340	355	62,5	3500	3500	640
	G1	2250	188	798	1670	1,05	345	388	75,9	3500	3500	640
	G2	2500	198	756	1670	1,05	335	420	84,1	3500	3500	640
225 L	E5	650	95	1396	2230	1,5	345	208	22,6	1100	3500	860
	EC	850	122	1370	2230	1,5	340	261	29,3	1600	3500	860
	E1	1000	141	1346	2230	1,5	340	297	34,3	2000	3500	860
	FA	1200	162	1289	2230	1,5	340	344	40,9	2500	3500	860
	F1	1500	195	1241	2230	1,5	340	415	50,8	3000	3500	860
	F2	1700	211	1185	2230	1,5	345	456	57,5	2800	3500	860
	G1	2000	232	1108	2230	1,5	310	515	67,5	3500	3500	860
225 X	ED	650	139	2042	3270	2,13	345	293	22,7	1200	3500	1080
	EB	850	179	2011	3270	2,13	340	375	29,4	1700	3500	1080
	E2	950	199	2000	3270	2,13	340	414	32,7	2000	3500	1080
	FA	1250	250	1910	3270	2,13	340	512	42,7	2700	3500	1080
	F1	1500	285	1814	3270	2,13	345	572	51	3000	3500	1080
	F2	1800	312	1655	3270	2,13	345	628	60,9	3500	3500	1080
280 M	EA	600	185	2944	4710	3,933	345	377	20,7	1000	3000	1290
	E1	730	221	2891	4710	3,933	345	444	25,1	1200	3000	1290
	E2	900	268	2843	4710	3,933	340	541	30,7	1700	3000	1290
	F1	1250	359	2742	4710	3,933	345	705	42,4	2200	3000	1290
280 L	EA	480	178	3541	5660	4,725	340	372	16,7	900	3000	1520
	E1	580	213	3507	5660	4,725	340	439	20	1100	3000	1520
	E2	750	270	3437	5660	4,725	345	540	25,7	1300	3000	1520
	F1	1000	350	3342	5660	4,725	340	701	34	1900	3000	1520
	F2	1550	507	3124	5660	4,725	345	988	52,3	2800	3000	1520
280 X	E1	490	196	3820	6110	5,682	345	412	17	800	2800	1890
	E2	620	245	3773	6110	5,682	340	514	21,3	1100	2800	1890
	F1	850	327	3673	6110	5,682	345	665	29	1400	2800	1890
	F2	1290	465	3442	6110	5,682	345	936	43,6	2300	2800	1890

Degree of protection: IP23
Cooling: IC06
Supply voltage from inverter: 3x400VRMS

Motor	Wind code	Nominal speed	Nominal power	Nominal torque	Maximum torque	Inertia	Nominal voltage	Nominal current	Nominal freq.	Maximum speed at Pn	Maximum speed	Weight
		nn [RPM]	Pn [kW]	Mn [Nm]	Mmax [Nm]	J [kgm²]	Vn [VRMS]	In [ARMS]	Fn [Hz]	n1 [RPM]	nmax [RPM]	W [kg]
80 S	E4	580	0,9	15	30	0,0060	400	2,2	19,3	950	9000	23
	E3	1000	1,5	14	30	0,0060	400	3,4	33,3	1600	9000	23
	F4	1500	2,2	14	30	0,0060	400	4,7	50	2400	9000	23
	F5	1800	2,6	14	30	0,0060	400	5,6	60	2900	9000	23
	F6	2200	3,0	13	30	0,0060	400	6,5	73.3	3600	9000	23
	G2	2600	3,4	12,3	30	0,0060	400	7,3	86.6	4200	9000	23
80 M	E4	580	1,3	21	40	0,0076	400	3,1	19,3	950	9000	27
	E3	1000	2,1	20	40	0,0076	400	4,6	33,3	1600	9000	27
	F4	1500	3,0	19	40	0,0076	400	6,4	50	2400	9000	27
	F5	1800	3,6	19	40	0,0076	400	7,6	60	2900	9000	27
	F6	2200	4,2	18	40	0,0076	400	8,9	73.3	3600	9000	27
	G2	2600	4,7	17	40	0,0076	400	9,9	86.6	4200	9000	27
80 L	E4	580	1,7	28	55	0,0102	400	4,0	19,3	950	9000	31
	E3	1000	2,8	27	55	0,0102	400	6,1	33,3	1600	9000	31
	F4	1500	4,0	26	55	0,0102	400	8,5	50	2400	9000	31
	F5	1800	4,8	26	55	0,0102	400	10,1	60	2900	9000	31
	F6	2200	5,6	24	55	0,0102	400	11,7	73.3	3600	9000	31
	G2	2600	6,2	23	55	0,0102	400	13,1	86.6	4200	9000	31
80 P	E4	580	2,3	39	80	0,0137	400	5,5	19,3	950	9000	37
	E3	1000	3,8	37	80	0,0137	400	8,3	33,3	1600	9000	37
	F4	1500	5,5	35	80	0,0137	400	11,5	50	2400	9000	37
	F5	1800	6,6	35	80	0,0137	400	13,7	60	2900	9000	37
	F6	2200	7,7	33	80	0,0137	400	15,9	73.3	3600	9000	37
	G2	2600	8,6	32	80	0,0137	400	17,7	86.6	4200	9000	37

Degree of protection: IP23
Cooling: IC06
Supply voltage from inverter: 3x400VRMS

SICME|ORANGE1

Motor	Wind code	Nominal speed	Nominal power	Nominal torque	Maximum torque	Inertia	Nominal voltage	Nominal current	Nominal freq.	Maximum speed at Pn	Maximum speed	Weight
		nn [RPM]	Pn [kW]	Mn [Nm]	Mmax [Nm]	J [kgm²]	Vn [VRMS]	In [ARMS]	Fn [Hz]	n1 [RPM]	nmax [RPM]	W [kg]
100 S	E2	580	3,2	52	110	0,0229	400	7,3	19,3	950	7500	44
	E1	1000	5,2	50	110	0,0229	400	11,1	33,3	1600	7500	44
	F1	1500	7,5	48	110	0,0229	400	15,3	50	2400	7500	44
	F2	1800	9	48	110	0,0229	400	18,4	60	2900	7500	44
	F3	2200	10,4	45	110	0,0229	400	21,3	73,3	3600	7500	44
	G1	2600	11,6	43	110	0,0229	400	23,8	86,6	4200	7500	44
100 M	E2	580	4,7	77	150	0,0298	400	10,7	19,3	950	7500	53
	E1	1000	7,7	74	150	0,0298	400	16,1	33,3	1600	7500	53
	F1	1500	11	70	150	0,0298	400	22,4	50	2400	7500	53
	F2	1800	13,2	70	150	0,0298	400	26,8	60	2900	7500	53
	F3	2200	15,3	67	150	0,0298	400	31	73,3	3600	7500	53
	G1	2600	17,2	63	150	0,0298	400	34,6	86,6	4200	7500	53
100 L	E2	580	5,5	91	180	0,035	400	12,7	19,3	950	7500	60
	E1	1000	9,1	87	180	0,035	400	19,1	33,3	1600	7500	60
	F1	1500	13	83	180	0,035	400	26,5	50	2400	7500	60
	F2	1800	15,6	83	180	0,035	400	31,7	60	2900	7500	60
	F3	2200	18,2	79	180	0,035	400	36,8	73,3	3600	7500	60
	G1	2600	20,3	75	180	0,035	400	41,1	86,6	4200	7500	60
100 P	E2	580	6,4	105	210	0,0418	400	14,4	19,3	950	7500	70
	E1	1000	10,5	100	210	0,0418	400	21,7	33,3	1600	7500	70
	F1	1500	15	96	210	0,0418	400	30,1	50	2400	7500	70
	F2	1800	18	96	210	0,0418	400	36,1	60	2900	7500	70
	F3	2200	20,9	91	210	0,0418	400	41,8	73,3	3600	7500	70
	G1	2600	23,4	86	210	0,0418	400	46,7	86,6	4200	7500	70
100X	E2	580	7,9	130	260	0,0556	400	17,8	19,3	950	7500	82
	E1	1000	13	124	260	0,0556	400	26,9	33,3	1600	7500	82
	F1	1500	18,5	118	260	0,0556	400	37,2	50	2400	7500	82
	F2	1800	22,2	118	260	0,0556	400	44,6	60	2900	7500	82
	F3	2200	25,8	112	260	0,0556	400	51,6	73,3	3600	7500	82
	G1	2600	28,9	106	260	0,0556	400	57,7	86,6	4200	7500	82
132 K	EC	800	13	155	250	0,067	395	28	28,9	1000	7000	132
	EB	1000	16	153	250	0,067	395	33	35,7	1200	7000	132
	E3	1350	21	149	250	0,067	400	42	47,2	1500	7000	132
	FA	1500	23	146	250	0,067	395	45	52,2	1900	7000	132
	F2	1800	27	143	250	0,067	400	52	62,1	2100	7000	132
	F3	2000	30	142	250	0,067	400	57	68,7	2300	7000	132
	G1	2500	36	138	250	0,067	395	70	85,3	3700	7000	132
	GB	3000	42	134	250	0,067	400	79	101,9	3600	7000	132
132 S	E2	850	19	213	340	0,086	385	40	30,3	1400	7000	157
	EC	1000	22	210	340	0,086	385	45	35,3	1700	7000	157
	E3	1250	27	206	340	0,086	400	52	43,5	1500	7000	157
	FB	1500	31	197	340	0,086	400	59	51,9	1700	7000	157
	F2	1800	35	186	340	0,086	400	67	61,8	2200	7000	157
	F4	2050	39	182	340	0,086	400	75	70	2600	7000	157
	G1	2450	43	168	340	0,086	400	83	83,3	3100	7000	157
	GB	3000	49	156	340	0,086	400	93	101,5	3900	7000	157
132 M	E4	850	21	236	380	0,098	395	43	30,3	1100	7000	175
	E3	1000	24	229	380	0,098	390	49	35,2	1600	7000	175
	EB	1250	29	222	380	0,098	395	58	43,5	1800	7000	175
	FB	1500	34	216	380	0,098	395	67	51,8	2200	7000	175
	F2	1800	39	207	380	0,098	400	74	61,8	2100	7000	175
	F3	2100	42	191	380	0,098	400	81	71,6	2700	7000	175
	G1	2500	47	180	380	0,098	395	92	84,8	4100	7000	175
	G2	2850	50	168	380	0,098	400	97	96,4	4000	7000	175

Degree of protection: IP23
Cooling: IC06
Supply voltage from inverter: 3x400VRMS

SICME|ORANGE1

Motor	Wind code	Nominal speed	Nominal power	Nominal torque	Maximum torque	Inertia	Nominal voltage	Nominal current	Nominal freq.	Maximum speed at Pn	Maximum speed	Weight
		nn [RPM]	Pn [kW]	Mn [Nm]	Mmax [Nm]	J [kgm²]	Vn [VRMS]	In [ARMS]	Fn [Hz]	n1 [RPM]	nmax [RPM]	W [kg]
132 P	E7	800	23	275	430	0,12	385	48	28,4	1400	7000	200
	ED	1000	28	267	430	0,12	390	56	35	1600	7000	200
	FC	1350	36	255	430	0,12	400	69	46,6	1600	7000	200
	FB	1500	39	248	430	0,12	390	77	51,5	2700	7000	200
	F2	1850	45	232	430	0,12	400	86	63,1	2500	7000	200
	F3	2100	48	218	430	0,12	400	92	71,4	2600	7000	200
	G1	2600	54	198	430	0,12	395	105	87,9	4400	7000	200
	G2	3000	57	181	430	0,12	400	112	101,1	4500	7000	200
132 X	E3	850	25	281	450	0,126	395	51	29,9	1200	7000	220
	EB	1000	29	277	450	0,126	390	59	34,8	1700	7000	220
	F3	1250	36	275	450	0,126	395	71	43,2	1900	7000	220
	FA	1500	42	267	450	0,126	400	81	51,5	1900	7000	220
	F1	1800	47	249	450	0,126	395	92	61,4	2900	7000	220
	F2	2000	50	239	450	0,126	390	98	68	3800	7000	220
	G1	2600	57	209	450	0,126	390	114	87,8	5600	7000	220
	G2	3000	60	191	450	0,126	380	125	101,1	7000	7000	220
160 M	E9	650	32	470	750	0,24	385	71	24	1000	6000	270
	EA	850	41	461	750	0,24	390	85	30,5	1200	6000	270
	E8	1000	47	449	750	0,24	390	96	35,5	1500	6000	270
	F4	1250	58	443	750	0,24	395	115	43,7	1700	6000	270
	FA	1500	68	433	750	0,24	400	130	52,1	1700	6000	270
	FE	1750	77	420	750	0,24	395	147	60,3	2500	6000	270
	F5	2000	85	406	750	0,24	395	162	68,5	3000	6000	270
	G2	2600	101	371	750	0,24	400	188	88,4	3500	6000	270
160 L	EC	650	40	588	940	0,302	385	85	23,7	1000	6000	325
	EA	850	51	573	940	0,302	395	102	30,3	1100	6000	325
	E1	1000	59	563	940	0,302	390	118	35,2	1600	6000	325
	FB	1250	72	550	940	0,302	390	140	43,5	2000	6000	325
	F1	1550	85	524	940	0,302	395	161	53,4	2300	6000	325
	F3	1800	95	504	940	0,302	395	179	61,7	2800	6000	325
	G2	2200	109	473	940	0,302	400	200	74,9	3000	6000	325
	GB	2650	119	429	940	0,302	390	225	89,8	5200	6000	325
160 P	EC	700	50	682	1100	0,36	395	100	25,2	1000	5000	365
	EB	850	60	674	1100	0,36	400	116	30,1	1000	5000	365
	E4	1000	69	659	1100	0,36	400	131	35,1	1300	5000	365
	FA	1300	86	632	1100	0,36	400	160	45	1700	5000	365
	F1	1500	96	611	1100	0,36	395	180	51,6	2400	5000	365
	FB	1800	109	578	1100	0,36	400	201	61,5	2600	5000	365
	FC	2000	116	554	1100	0,36	400	213	68,1	3000	5000	365
	G2	2500	129	493	1100	0,36	395	242	84,6	4900	5000	365
160 X	E3	650	51	749	1200	0,39	390	104	23,5	1000	4500	395
	EB	850	65	730	1200	0,39	400	125	30,1	1000	4500	395
	E1	1000	75	716	1200	0,39	395	144	35	1500	4500	395
	F5	1250	90	688	1200	0,39	400	168	43,3	1700	4500	395
	F3	1500	104	662	1200	0,39	400	190	51,6	2000	4500	395
	F2	1800	117	621	1200	0,39	400	214	61,4	2700	4500	395
	FC	2000	124	592	1200	0,39	395	229	68,1	3600	4500	395
	G2	2500	135	516	1200	0,39	380	262	84,5	4500	4500	395
180 K	ED	580	37	609	1000	0.490	385	85	20.7	700	4500	390
	E4	1000	63	602	1000	0.490	390	131	34.7	1200	4500	390
	FB	1500	93	592	1000	0.490	385	188	51.3	2000	4500	390
	F3	1750	107	584	1000	0.490	385	212	59.6	2300	4500	390
	GA	2100	125	568	1000	0.490	395	240	71.2	2400	4500	390
	G2	2600	149	547	1000	0.490	395	283	87.9	2900	4500	390
180 S	ED	580	44	724	1250	0.590	385	99	20.7	800	4500	435
	E4	1000	75	716	1250	0.590	385	152	34.7	1300	4500	435
	FB	1500	109	694	1250	0.590	395	207	51.3	1700	4500	435
	F2	1750	124	677	1250	0.590	390	235	59.6	2300	4500	435
	F4	2150	144	640	1250	0.590	395	268	72.8	2600	4500	435
	G3	2700	163	576	1250	0.590	390	307	91.1	3800	4500	435

Degree of protection: IP23
Cooling: IC06
Supply voltage from inverter: 3x400VRMS

SICME|ORANGE1

Motor	Wind code	Nominal speed	Nominal power	Nominal torque	Maximum torque	Inertia	Nominal voltage	Nominal current	Nominal freq.	Maximum speed at Pn	Maximum speed	Weight
		nn [RPM]	Pn [kW]	Mn [Nm]	Mmax [Nm]	J [kgm²]	Vn [VRMS]	In [ARMS]	Fn [Hz]	n1 [RPM]	nmax [RPM]	W [kg]
180 M	ED	580	50	823	1500	0.690	385	110	20.7	800	4500	480
	E4	1000	85	812	1500	0.690	380	172	34.6	1600	4500	480
	FA	1500	122	777	1500	0.690	390	229	51.2	2100	4500	480
	F2	1800	141	748	1500	0.690	385	265	61.2	2800	4500	480
	G1	2250	162	688	1500	0.690	380	305	76.1	4100	4500	480
	G2	2600	171	628	1500	0.690	380	325	87.6	4500	4500	480
180 L	ED	580	58	955	1700	0.810	395	120	20.7	700	4500	535
	E4	1000	97	926	1700	0.810	390	190	34.6	1400	4500	535
	FB	1500	138	879	1700	0.810	375	265	51.2	2900	4500	535
	F1	1750	154	840	1700	0.810	390	283	59.5	2700	4500	535
	G1	2200	175	760	1700	0.810	380	331	74.3	4500	4500	535
	G2	2600	182	668	1700	0.810	380	347	87.6	4500	4500	535
180 P	ED	580	65	1070	1900	0.920	395	132	20.6	700	4500	580
	E4	1000	108	1031	1900	0.920	380	214	34.6	1800	4500	580
	FA	1500	153	974	1900	0.920	385	286	51.1	2600	4500	580
	F1	1750	170	928	1900	0.920	395	307	59.4	2500	4500	580
	F2	2050	185	862	1900	0.920	395	330	69.4	2900	4500	580
	GA	2400	193	768	1900	0.920	395	348	80.9	3700	4500	580
225 S	E4	650	71	1043	1670	1,05	395	135	22,7	800	3500	640
	EC	800	86	1027	1670	1,05	395	161	27,6	1000	3500	640
	E5	1000	104	993	1670	1,05	385	200	34,3	1600	3500	640
	FB	1250	124	947	1670	1,05	390	233	42,6	1800	3500	640
	FA	1500	144	917	1670	1,05	400	260	50,9	1700	3500	640
	F1	1800	161	854	1670	1,05	390	295	60,9	2700	3500	640
	F2	2000	176	840	1670	1,05	390	320	67,5	2900	3500	640
225 L	E3	650	95	1396	2230	1,5	395	178	22,7	800	3500	860
	EA	850	122	1370	2230	1,5	390	230	29,3	1300	3500	860
	EC	1000	141	1346	2230	1,5	395	255	34,3	1300	3500	860
	E2	1300	174	1278	2230	1,5	400	310	44,2	1500	3500	860
	FA	1450	190	1251	2230	1,5	400	336	49,2	1700	3500	860
	F1	1800	216	1146	2230	1,5	390	391	60,8	2800	3500	860
225 X	E3	650	139	2042	3270	2,13	395	254	22,7	800	3500	1080
	E4	800	169	2017	3270	2,13	385	313	27,7	1400	3500	1080
	EB	1000	208	1986	3270	2,13	395	370	34,4	1300	3500	1080
	E1	1250	250	1910	3270	2,13	390	447	42,7	2000	3500	1080
	FA	1450	280	1844	3270	2,13	395	493	49,3	2100	3500	1080
	F1	1700	305	1713	3270	2,13	390	540	57,6	3000	3500	1080
280 M	EA	690	210	2906	4710	3,933	395	370	23,7	900	3000	1290
	E1	840	252	2865	4710	3,933	395	439	28,7	1100	3000	1290
	E2	1060	311	2802	4710	3,933	395	536	36	1400	3000	1290
	F1	1450	407	2680	4710	3,933	400	686	49	1500	3000	1290
280 L	EA	560	206	3512	5660	4,725	395	366	19,4	700	3000	1520
	E1	680	247	3468	5660	4,725	395	434	23,3	900	3000	1520
	E2	870	309	3391	5660	4,725	395	535	29,7	1100	3000	1520
	F1	1170	401	3273	5660	4,725	395	688	39,7	1600	3000	1520
280 X	EA	470	189	3840	6110	5,682	395	347	16,4	600	2800	1890
	E1	570	226	3786	6110	5,682	395	410	19,7	700	2800	1890
	E2	720	281	3727	6110	5,682	395	503	24,7	900	2800	1890
	F1	980	371	3615	6110	5,682	395	656	33,3	1300	2800	1890
	F2	1510	524	3314	6110	5,682	400	907	50,9	1600	2800	1890

Degree of protection: IP23
Cooling: IC06
Supply voltage from inverter: 3x400VRMS

SICME|ORANGE1

Motor	Wind code	Nominal speed	Nominal power	Nominal torque	Maximum torque	Inertia	Nominal voltage	Nominal current	Nominal freq.	Maximum speed at Pn	Maximum speed	Weight
		nn [RPM]	Pn [kW]	Mn [Nm]	Mmax [Nm]	J [kgm²]	Vn [VRMS]	In [ARMS]	Fn [Hz]	n1 [RPM]	nmax [RPM]	W [kg]
315 M	G7	580	240	3954	5000	6,05	400	417	19,3	950	2600	1600
	H7	1000	375	3583	5000	6,05	400	623	33,3	1600	2600	1600
	F6	1500	500	3185	5000	6,05	400	813	50	2000	2600	1600
	E7	1800	560	2973	5000	6,05	400	910	60	2000	2600	1600
315 L	M7	580	300	4942	6400	7,26	400	524	19,3	950	2600	1920
	B6	1000	470	4491	6400	7,26	400	795	33,3	1600	2600	1920
	C7	1500	620	3949	6400	7,26	400	1018	50	2000	2600	1920
	C6	1800	680	3610	6400	7,26	400	1095	60	2000	2600	1920
315 P	L7	580	390	6425	8200	9,69	400	685	19,3	950	2600	2560
	E7	1000	600	5733	8200	9,69	400	991	33,3	1600	2600	2560
	C8	1500	800	5096	8200	9,69	400	1297	50	2000	2600	2560
	B7	1800	850	4512	8200	9,69	400	1394	60	2000	2600	2560
315 X	F8	580	450	7413	9800	11,25	400	776	19,3	950	2600	2945
	C8	1000	720	6880	9800	11,25	400	1188	33,3	1600	2600	2945
	A8	1500	960	6115	9800	11,25	400	1579	50	2000	2600	2945
	A8	1800	1050	5574	9800	11,25	400	1684	60	2000	2600	2945
355 S	M2	500	263	5016	10000	24,5	400	485	25	1000	2200	2300
	H2	750	386	4919	10000	24,5	400	701	37,5	1500	2200	2300
	G2	1000	510	4870	10000	24,5	400	897	50	2000	2200	2300
	F1	1250	625	4773	10000	24,5	400	1099	62,5	2200	2200	2300
	E2	1500	727	4627	10000	24,5	400	1278	75	2200	2200	2300
	E4	1800	835	4432	10000	24,5	400	1469	90	2200	2200	2300
355 M	L1	500	305	5820	11500	28,5	400	562	25	1000	2200	2700
	H2	750	448	5707	11500	28,5	400	813	37,5	1500	2200	2700
	G3	1000	592	5650	11500	28,5	400	1041	50	2000	2200	2700
	F1	1250	725	5537	11500	28,5	400	1275	62,5	2200	2200	2700
	F3	1500	843	5368	11500	28,5	400	1482	75	2200	2200	2700
	E1	1800	969	5142	11500	28,5	400	1704	90	2200	2200	2700
355 L	H1	500	351	6695	13000	32,5	400	646	25	1000	2200	3100
	G2	750	516	6565	13000	32,5	400	934	37,5	1500	2200	3100
	F1	1000	681	6500	13000	32,5	400	1195	50	2000	2200	3100
	E3	1250	834	6370	13000	32,5	400	1464	62,5	2200	2200	3100
	D2	1500	970	6175	13000	32,5	400	1705	75	2200	2200	3100
	D4	1800	1115	5915	13000	32,5	400	1960	90	2200	2200	3100
355 P	F2	500	394	7534	14500	36,5	400	725	25	1000	2200	3500
	E3	750	580	7388	14500	36,5	400	1074	37,5	1500	2200	3500
	D1	1000	766	7314	14500	36,5	400	1344	50	2000	2200	3500
	D3	1250	938	7168	14500	36,5	400	1647	62,5	2200	2200	3500
	C2	1500	1088	6931	14500	36,5	400	1918	75	2200	2200	3500
	B1	1800	1243	6598	14500	36,5	400	2205	90	2200	2200	3500

Degree of protection: IP23
Cooling: IC06
Supply voltage from inverter: 3x690VRMS

SICME|ORANGE1

Motor	Wind code	Nominal speed	Nominal power	Nominal torque	Maximum torque	Inertia	Nominal voltage	Nominal current	Nominal freq.	Maximum speed at Pn	Maximum speed	Weight
		nn [RPM]	Pn [kW]	Mn [Nm]	Mmax [Nm]	J [kgm²]	Vn [VRMS]	In [ARMS]	Fn [Hz]	n1 [RPM]	nmax [RPM]	W [kg]
355 S	R1	500	253	4834	10000	24,5	690	284	25	1000	2200	2300
	N2	750	373	4749	10000	24,5	690	392	37,5	1500	2200	2300
	M3	1000	492	4700	10000	24,5	690	502	50	2000	2200	2300
	L1	1250	603	4606	10000	24,5	690	615	62,5	2200	2200	2300
	L3	1500	701	4465	10000	24,5	690	715	75	2200	2200	2300
	H2	1800	806	4277	10000	24,5	690	822	90	2200	2200	2300
355 M	Q2	500	291	5562	11500	28,5	690	326	25	1000	2200	2700
	P1	750	428	5454	11500	28,5	690	451	37,5	1500	2200	2700
	N2	1000	565	5400	11500	28,5	690	577	50	2000	2200	2700
	M3	1250	693	5292	11500	28,5	690	707	62,5	2200	2200	2700
	L2	1500	806	5130	11500	28,5	690	821	75	2200	2200	2700
	L4	1800	926	4914	11500	28,5	690	944	90	2200	2200	2700
355 L	N3	500	340	6497	13000	32,5	690	380	25	1000	2200	3100
	M4	750	500	6363	13000	32,5	690	525	37,5	1500	2200	3100
	L1	1000	660	6300	13000	32,5	690	672	50	2000	2200	3100
	H2	1250	808	6174	13000	32,5	690	823	62,5	2200	2200	3100
	H4	1500	940	5985	13000	32,5	690	958	75	2200	2200	3100
	G1	1800	1081	5733	13000	32,5	690	1101	90	2200	2200	3100
355 P	M3	500	382	7302	14500	36,5	690	408	25	1000	2200	3500
	H2	750	562	7161	14500	36,5	690	590	37,5	1500	2200	3500
	G3	1000	742	7090	14500	36,5	690	756	50	2000	2200	3500
	F1	1250	909	6948	14500	36,5	690	926	62,5	2200	2200	3500
	F3	1500	1055	6717	14500	36,5	690	1077	75	2200	2200	3500
	E1	1800	1205	6395	14500	36,5	690	1238	90	2200	2200	3500
400 S	N1	500	412	7716	15000	48	690	431	25	1000	2200	3700
	P1	750	606	7716	15000	48	690	617	37,5	1500	2200	3700
	E1	1000	800	7640	15000	48	690	775	50	2000	2200	3700
	D1	1250	980	7487	15000	48	690	944	62,5	2200	2200	3700
	G1	1500	1137	7239	15000	48	690	1095	75	2200	2200	3700
	B1	1800	1298	6891	15000	48	690	1260	90	2200	2200	3700
400 M	V1	500	464	8686	17000	54	690	485	25	1000	2200	4200
	P1	750	682	8686	17000	54	690	694	37,5	1500	2200	4200
	L1	1000	900	8600	17000	54	690	872	50	2000	2200	4200
	G1	1250	1103	8428	17000	54	690	1063	62,5	2200	2200	4200
	B1	1500	1280	8149	17000	54	690	1233	75	2200	2200	4200
	E1	1800	1462	7757	17000	54	690	1405	90	2200	2200	4200
400 L	U1	500	515	9646	18000	60	690	538	25	1000	2200	4700
	N1	750	758	9646	18000	60	690	769	37,5	1500	2200	4700
	D1	1000	1000	9550	18000	60	690	967	50	2000	2200	4700
	G2	1250	1225	9359	18000	60	690	1180	62,5	2200	2200	4700
	E1	1500	1421	9050	18000	60	690	1369	75	2200	2200	4700
	A1	1800	1624	8614	18000	60	690	1564	90	2200	2200	4700

Degree of protection: IP23
Cooling: IC06
Supply voltage from inverter: 3x690VRMS

SICME|ORANGE1

Motor	Wind code	Nominal speed	Nominal power	Nominal torque	Maximum torque	Inertia	Nominal voltage	Nominal current	Nominal freq.	Maximum speed at Pn	Maximum speed	Weight
		nn [RPM]	Pn [kW]	Mn [Nm]	Mmax [Nm]	J [kgm²]	Vn [VRMS]	In [ARMS]	Fn [Hz]	n1 [RPM]	nmax [RPM]	W [kg]
450 S	L1	500	566	10605	20000	67	690	589	25	1000	2200	5000
	H2	750	833	10605	20000	67	690	843	37,5	1500	2200	5000
	G1	1000	1100	10500	20000	67	690	1061	50	2000	2200	5000
	G4	1250	1347	10290	20000	67	690	1297	62,5	2200	2200	5000
	F1	1500	1563	9950	20000	67	690	1505	75	2200	2200	5000
	E1	1800	1785	9471	20000	67	690	1720	90	2200	2200	5000
450 M	H2	500	644	12070	24000	76	690	670	25	1000	2200	5630
	G3	750	948	12070	24000	76	690	959	37,5	1500	2200	5630
	F1	1000	1250	11950	24000	76	690	1207	50	2000	2200	5630
	F4	1250	1533	11711	24000	76	690	1477	62,5	2200	2200	5630
	E1	1500	1779	11323	24000	76	690	1713	75	2200	2200	5630
	D1	1800	2032	10779	24000	76	690	1957	90	2200	2200	5630
450 L	G2	500	772	14463	28000	88	690	802	25	1000	2200	6560
	F1	750	1136	14463	28000	88	690	1148	37,5	1500	2200	6560
	F4	1000	1500	14320	28000	88	690	1446	50	2000	2200	6560
	E2	1250	1837	14034	28000	88	690	1770	62,5	2200	2200	6560
	D3	1500	2131	13568	28000	88	690	2053	75	2200	2200	6560
	C1	1800	2435	12917	28000	88	690	2345	90	2200	2200	6560
500 S	H1	500	901	16882	32000	119	690	933	25	1000	2000	7350
	G3	750	1326	16882	32000	119	690	1335	37,5	1500	2000	7350
	F1	1000	1750	16715	32000	119	690	1688	50	2000	2000	7350
	F4	1250	2144	16381	32000	119	690	2065	62,5	2000	2000	7350
	E2	1500	2488	15837	32000	119	690	2396	75	2000	2000	7350
	D3	1800	2842	15077	32000	119	690	2738	90	2000	2000	7350
500 M	G3	500	1030	19291	38000	138	690	1065	25	1000	2000	8500
	F2	750	1515	19291	38000	138	690	1524	37,5	1500	2000	8500
	E1	1000	2000	19100	38000	138	690	1927	50	2000	2000	8500
	D4	1250	2450	18718	38000	138	690	2360	62,5	2000	2000	8500
	C1	1500	2843	18097	38000	138	690	2738	75	2000	2000	8500
	C4	1800	3247	17228	38000	138	690	3128	90	2000	2000	8500
500 L	F2	500	1159	21705	42000	157	690	1197	25	1000	2000	9650
	E3	750	1705	21705	42000	157	690	1713	37,5	1500	2000	9650
	D1	1000	2250	21490	42000	157	690	2168	50	2000	2000	9650
	D4	1250	2757	21060	42000	157	690	2656	62,5	2000	2000	9650
	C2	1500	3198	20362	42000	157	690	3081	75	2000	2000	9650
	B1	1800	3654	19384	42000	157	690	3520	90	2000	2000	9650

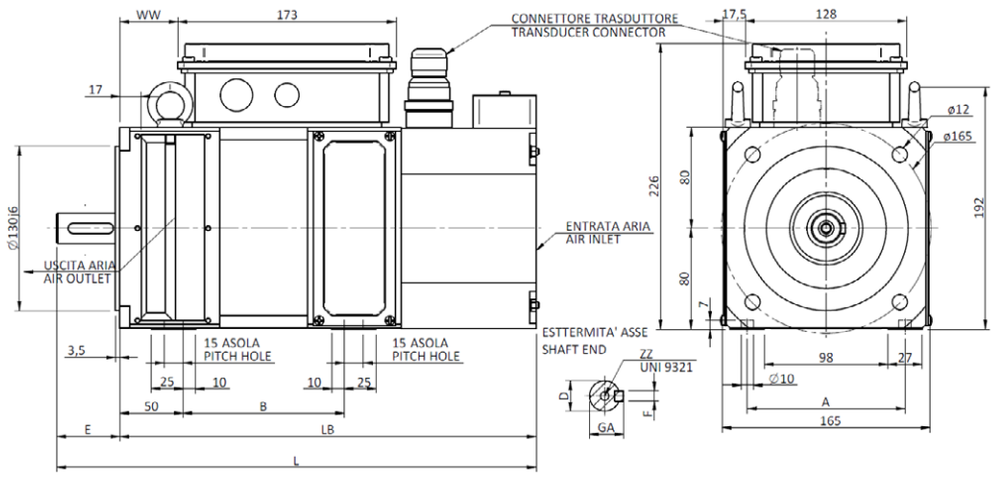

3289/0

MQ80 IP54-PVAP

Flange dimensions refer to B35 version available on request

Type	A	B	D	E	F	GA	L	LB	WW	ZZ
MQ 80 S	125	113	Ø 24 j6	50	8h9	27	365	315	31	M8
MQ 80 M	125	138	Ø 24 j6	50	8h9	27	390	340	56	M8
MQ 80 L	125	163	Ø 28 j6	60	8h9	31	425	365	81	M10
MQ 80 P	125	203	Ø 28 j6	60	8h9	31	465	405	121	M10

Overall Dimension

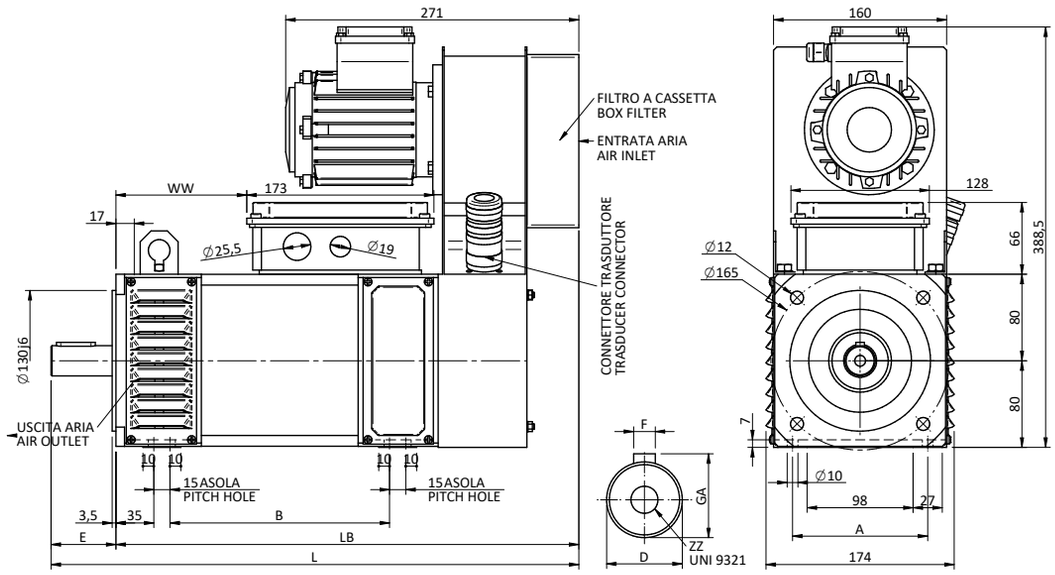

3290/A

MQ80 IP23-PVA

Flange dimensions refer to B35 version available on request

Type	A	B	D	E	F	GA	L	LB	WW	ZZ
MQ 80 S	125	113	Ø 24 j6	50	8h9	27	388	338	31	M8
MQ 80 M	125	138	Ø 24 j6	50	8h9	27	413	363	56	M8
MQ 80 L	125	163	Ø 28 j6	60	8h9	31	448	388	81	M10
MQ 80 P	125	203	Ø 28 j6	60	8h9	31	488	428	121	M10

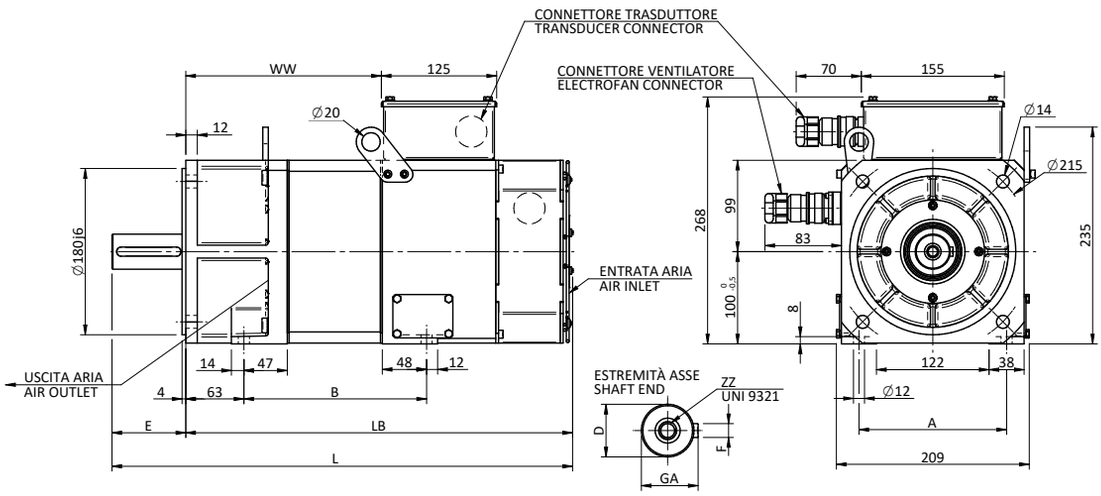

3035/B

MQ100 IP54-PVAP

Flange dimensions refer to B35 version available on request

Type	A	B	D	E	F	GA	L	LB	WW	ZZ
MQ100 S	160	198	Ø 38k6	80	10h9	41	500	420	212	M12
MQ100 M	160	258	Ø 38k6	80	10h9	41	560	480	272	M12
MQ100 L	160	318	Ø 38k6	80	10h9	41	620	540	332	M12
MQ100 P	160	378	Ø 38k6	80	10h9	41	680	600	392	M12

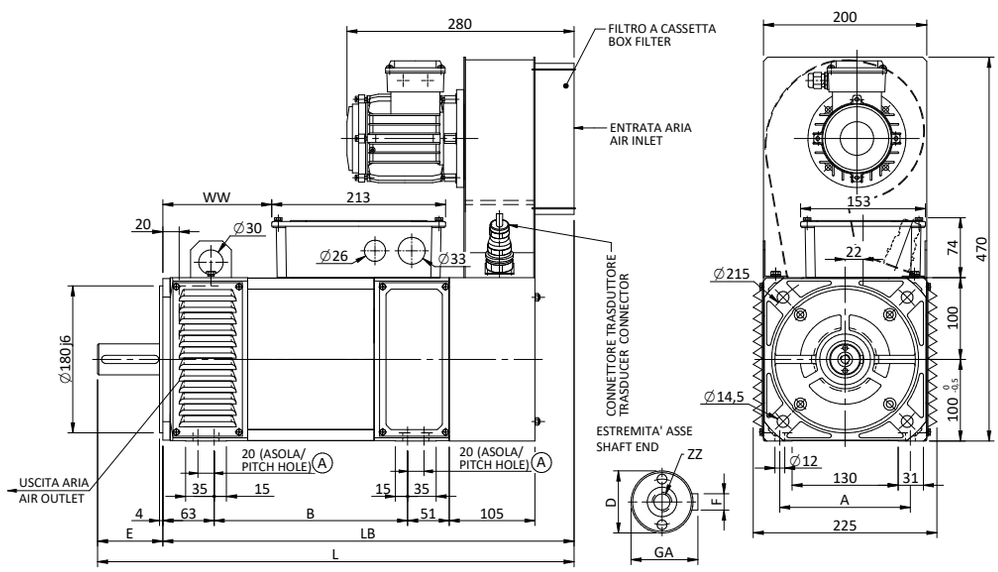

3251/A

MQ100 IP23-PVA

Flange dimensions refer to B35 version available on request

Type	A	B	D	E	F	GA	L	LB	WW	ZZ
MQ100 S	160	197	Ø 38k6	80	10h9	41	544	464	93	M12
MQ100 M	160	237	Ø 38k6	80	10h9	41	584	504	133	M12
MQ100 L	160	267	Ø 38k6	80	10h9	41	614	534	163	M12
MQ100 P	160	307	Ø 38k6	80	10h9	41	654	574	203	M12
MQ100 X	160	362	Ø 38k6	80	10h9	41	709	629	258	M12

Overall Dimension

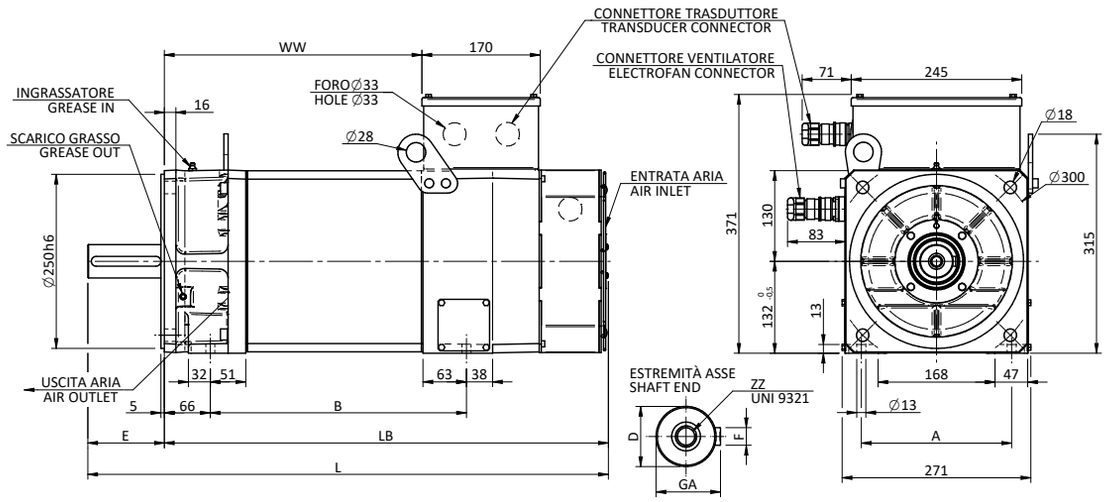

3036/C

MQ132 IP54-PVAP

Flange dimensions refer to B35 version available on request

Type	A	B	D	E	F	GA	L	LB	WW	ZZ
MQ132 K	216	308	Ø 48k6	110	14h9	51,5	688	578	310	M16
MQ132 S	216	368	Ø 48k6	110	14h9	51,5	748	638	370	M16
MQ132 M	216	408	Ø 48k6	110	14h9	51,5	788	678	410	M16
MQ132 P	216	473	Ø 48k6	110	14h9	51,5	853	743	475	M16
MQ132 X	216	518	Ø 48k6	110	14h9	51,5	898	788	520	M16

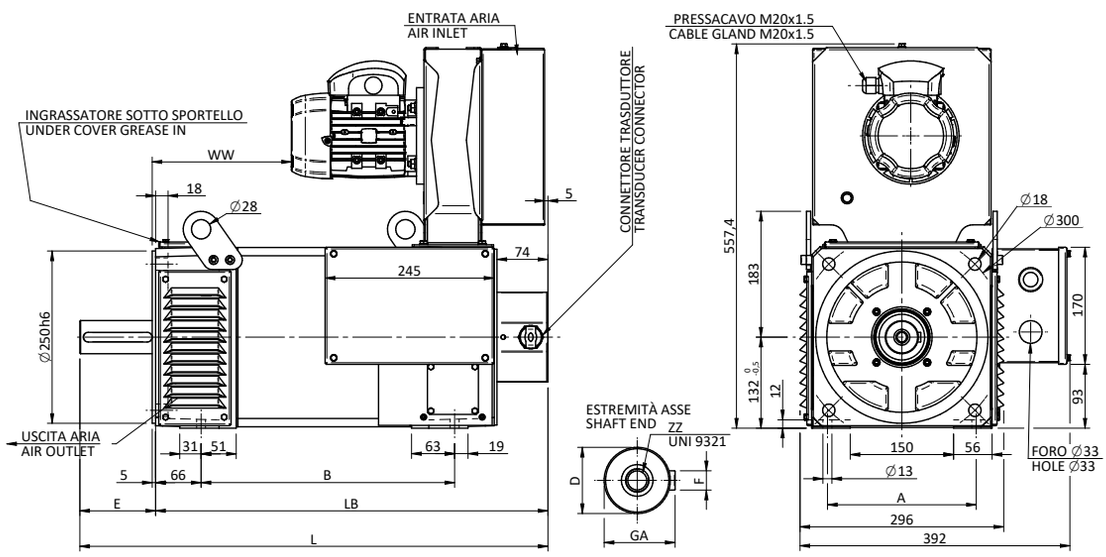

3040/E

MQ132 IP23-PVA

Flange dimensions refer to B35 version available on request

Type	A	B	D	E	F	GA	L	LB	WW	ZZ
MQ132 K	216	308	Ø 48k6	110	14h9	51,5	620	510	142	M16
MQ132 S	216	368	Ø 48k6	110	14h9	51,5	680	570	202	M16
MQ132 M	216	408	Ø 48k6	110	14h9	51,5	720	610	242	M16
MQ132 P	216	473	Ø 48k6	110	14h9	51,5	785	675	307	M16
MQ132 X	216	518	Ø 48k6	110	14h9	51,5	830	720	352	M16

Overall Dimension

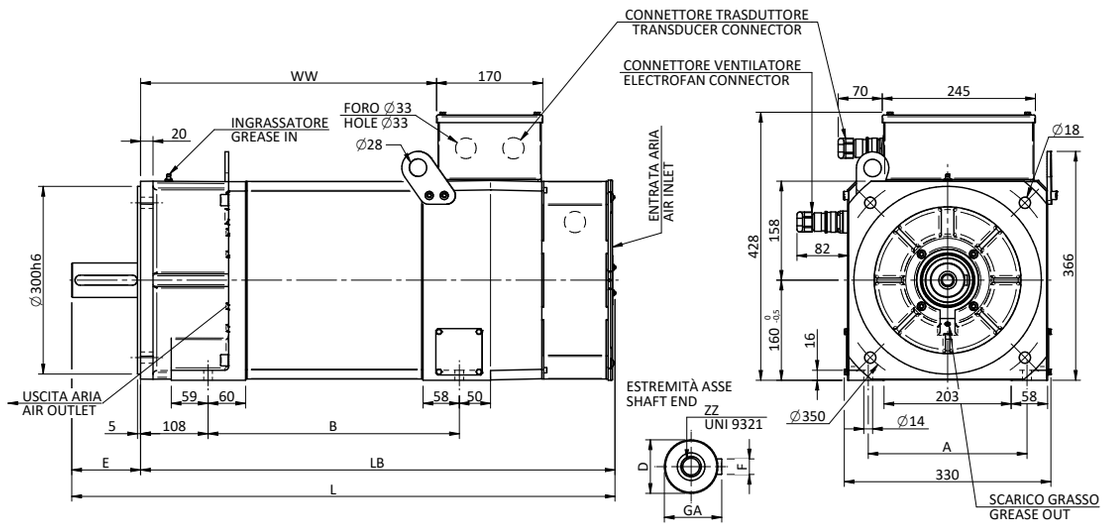

3037/C

MQ160 IP54-PVAP

Flange dimensions refer to B35 version available on request

Type	A	B	D	E	F	GA	L	LB	WW	ZZ
MQ160 M	254	402	Ø 55m6	110	16h9	59	869	759	474	M20
MQ160 L	254	482	Ø 55m6	110	16h9	59	949	839	554	M20
MQ160 P	254	552	Ø 55m6	110	16h9	59	1019	909	624	M20
MQ160 X	254	602	Ø 55m6	110	16h9	59	1069	959	674	M20

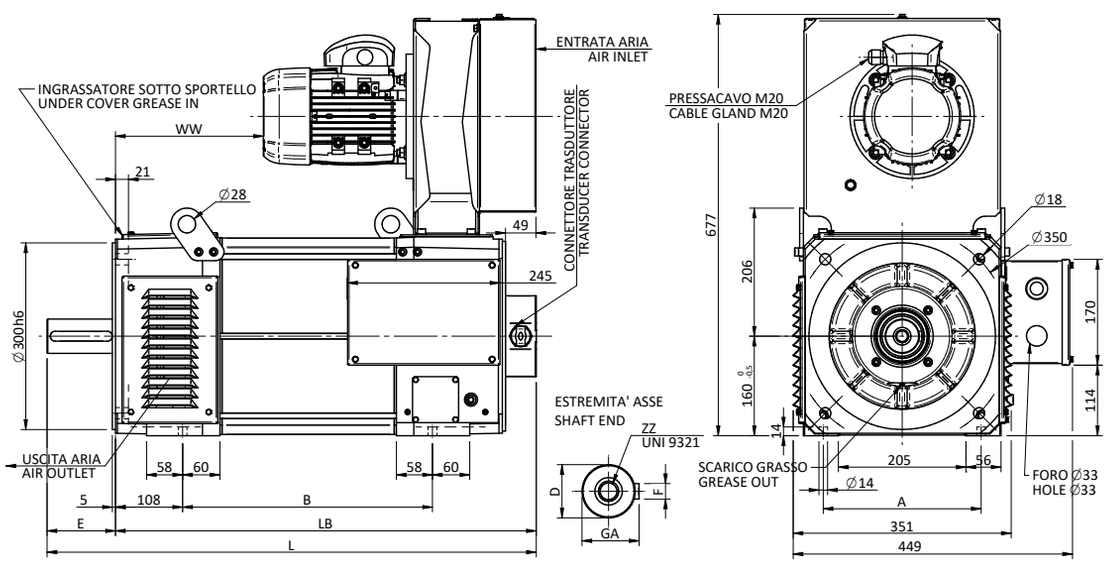

3038/D

MQ160 IP23-PVA

Flange dimensions refer to B35 version available on request

Type	A	B	D	E	F	GA	L	LB	WW	ZZ
MQ160 M	254	402	Ø 55m6	110	16h9	59	787	677	238	M20
MQ160 L	254	482	Ø 55m6	110	16h9	59	867	757	318	M20
MQ160 P	254	552	Ø 55m6	110	16h9	59	937	827	388	M20
MQ160 X	254	602	Ø 55m6	110	16h9	59	987	877	438	M20

Overall Dimension

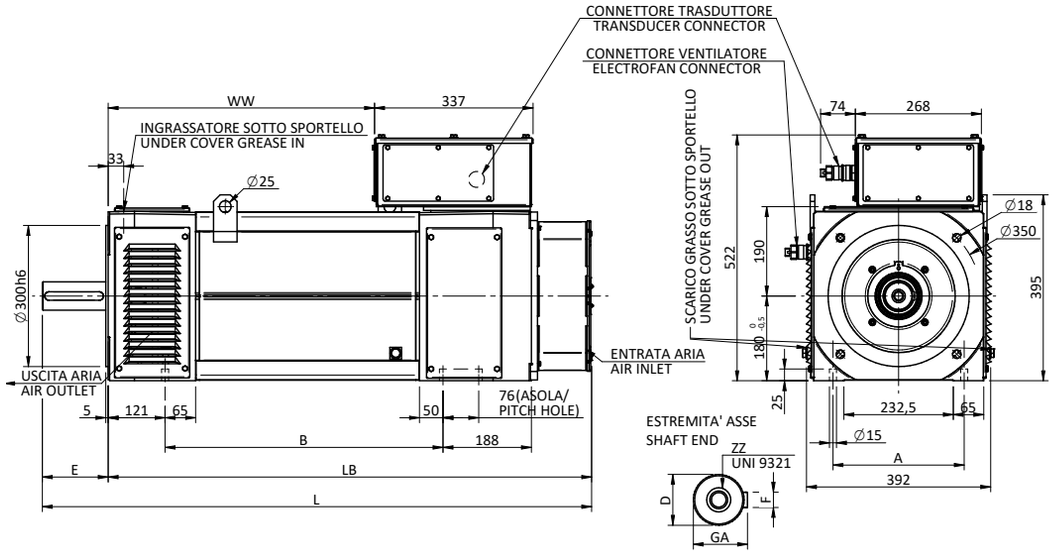

3043/F

MQ180 IP54-PVAP

Flange dimensions refer to B35 version available on request

Type	A	B*	D	E	F	GA	L	LB	WW	ZZ
MQ180 K	279	400	Ø 60m6	140	18h9	64	980	840	376	M20
MQ180 S	279	460	Ø 60m6	140	18h9	64	1040	900	436	M20
MQ180 M	279	520	Ø 60m6	140	18h9	64	1100	960	496	M20
MQ180 L	279	590	Ø 60m6	140	18h9	64	1170	1030	566	M20
MQ180 P	279	660	Ø 60m6	140	18h9	64	1240	1100	636	M20

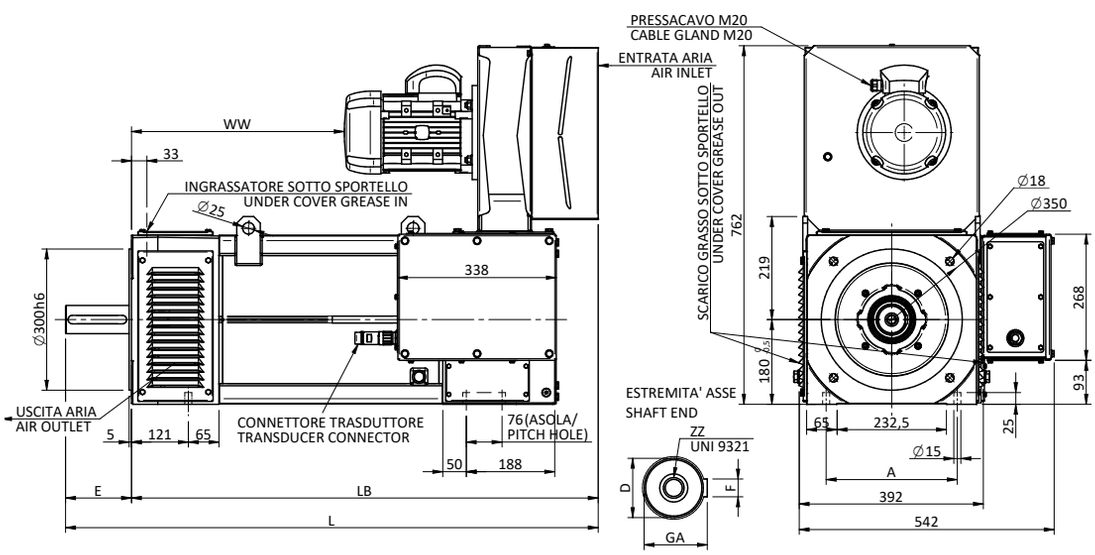

3039/G.

MQ180 IP54/IP23-PVA

Flange dimensions refer to B35 version available on request

Type	A	B*	D	E	F	GA	L	LB	WW	ZZ
MQ180 K	279	400	Ø 60m6	140	18h9	64	943	803	262	M20
MQ180 S	279	460	Ø 60m6	140	18h9	64	1003	863	322	M20
MQ180 M	279	520	Ø 60m6	140	18h9	64	1063	923	382	M20
MQ180 L	279	590	Ø 60m6	140	18h9	64	1133	993	452	M20
MQ180 P	279	660	Ø 60m6	140	18h9	64	1203	1063	522	M20

Overall Dimension

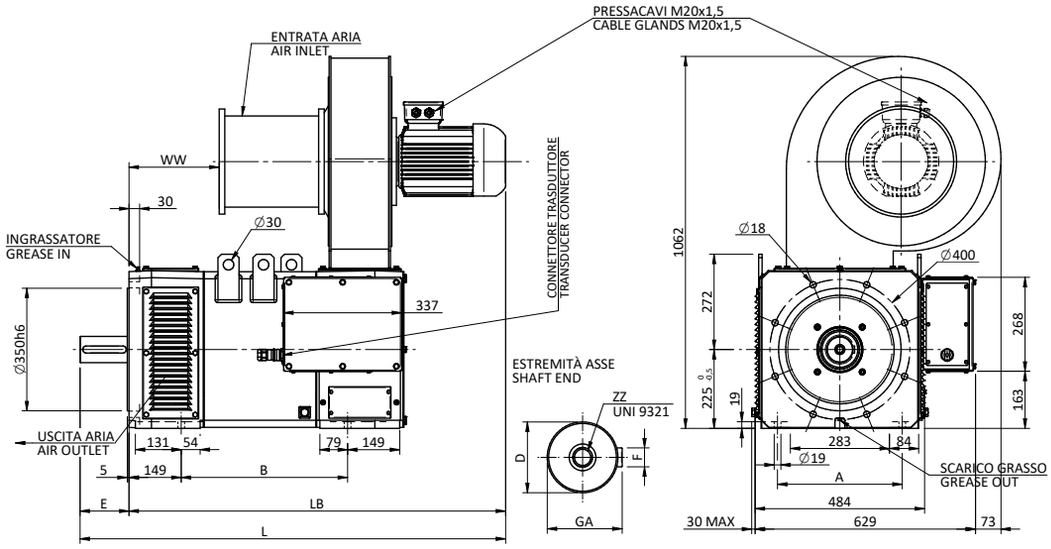

3041/C

MQ225 IP54/IP23-PVA

Flange dimensions refer to B35 version available on request

Type	A	B	D	E	F	GA	L	LB	WW	ZZ
MQ225 S	356	475	Ø 75m6	140	20h9	79,5	1216	1076	257	M20
MQ225 L	356	615	Ø 75m6	140	20h9	79,5	1356	1216	397	M20
MQ225 X	356	805	Ø 75m6	140	20h9	79,5	1546	1406	587	M20

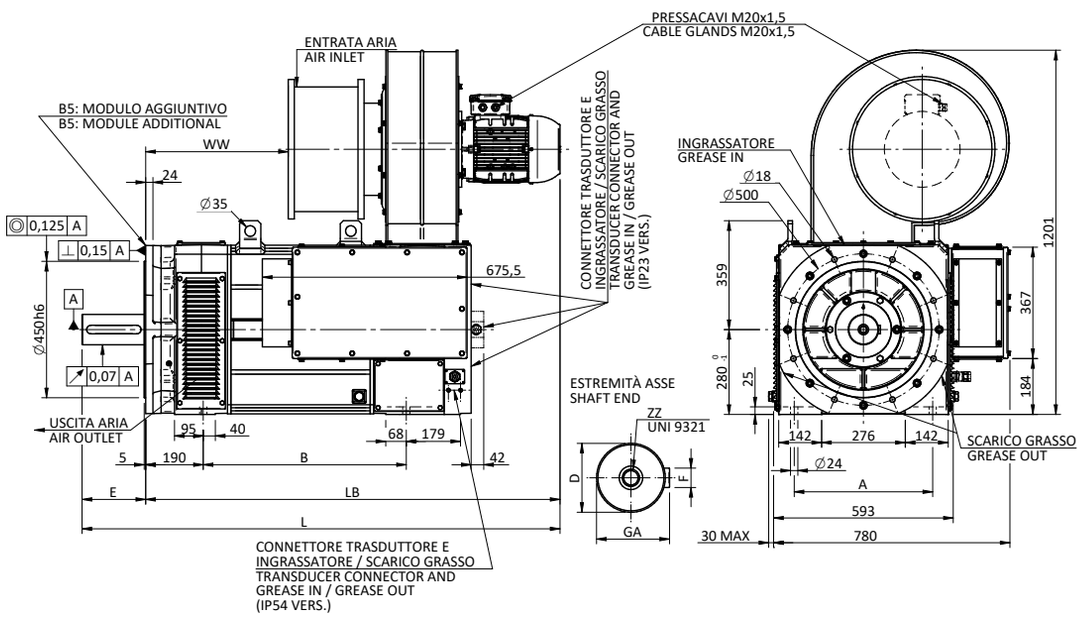

3042/C

MQ280 IP54/IP23-PVA

Flange dimensions refer to B35 version available on request

Type	A	B	D	E	F	GA	L	LB	WW	ZZ
MQ280 M	457	670	Ø 100m6	210	28h9	106	1577	1367	471	M24
MQ280 L	457	770	Ø 100m6	210	28h9	106	1677	1467	571	M24
MQ280 X	457	930	Ø 100m6	210	28h9	106	1837	1627	731	M24

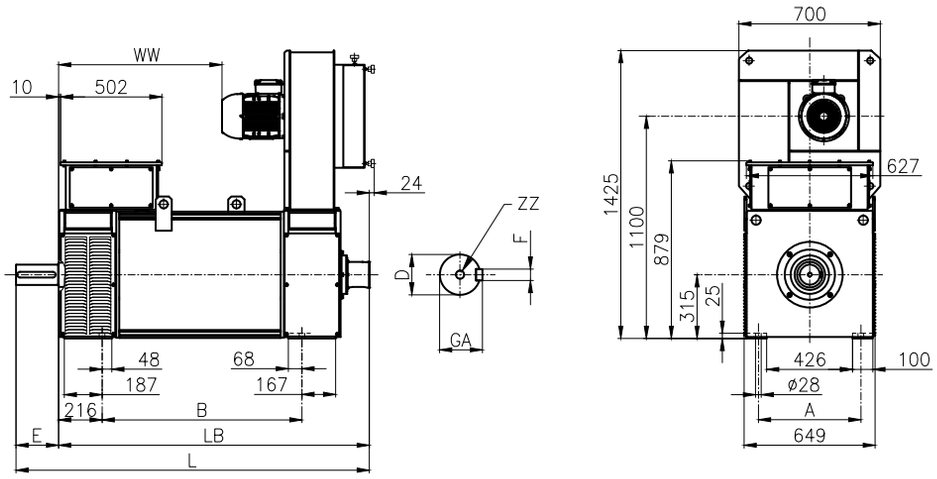

3292/0

MQ315 IP54/IP23-PVA

Flange dimensions refer to B35 version available on request

Type	A	B	D	E	F	GA	L	LB	WW	ZZ
MQ315 M	508	690	Ø 100m6	210	28	106	1450	1240	510	M24
MQ315 L	508	790	Ø 100m6	210	28	106	1550	1340	610	M24
MQ315 P	508	990	Ø 100m6	210	28	106	1750	1540	810	M24
MQ315 X	508	1110	Ø 100m6	210	28	106	1870	1660	930	M24

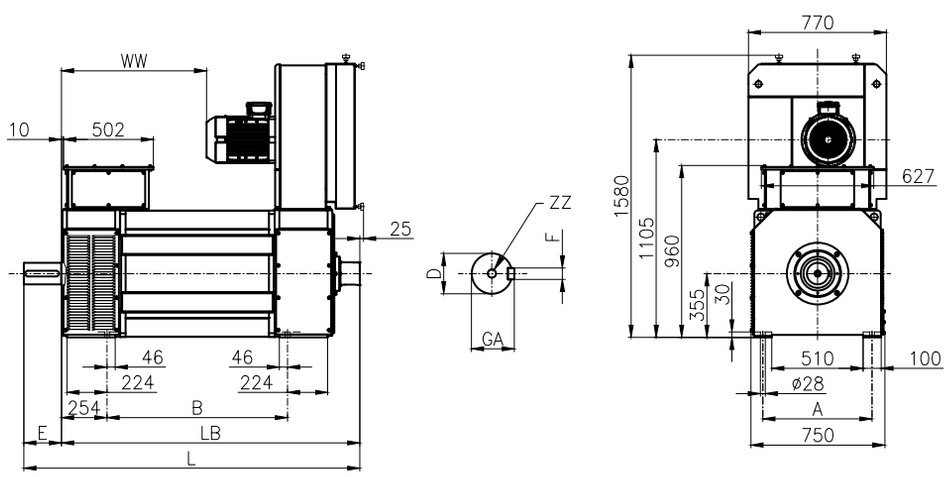

3293/0

MQ355 IP54/IP23-PVA

Flange dimensions refer to B35 version available on request

Type	A	B	D	E	F	GA	L	LB	WW	ZZ
MQ355 S	610	808	Ø 120m6	210	32	127	1720	1510	609	M24
MQ355 M	610	908	Ø 120m6	210	32	127	1820	1610	709	M24
MQ355 L	610	1008	Ø 120m6	210	32	127	1920	1710	809	M24
MQ355 P	610	1108	Ø 120m6	210	32	127	2020	1810	909	M24

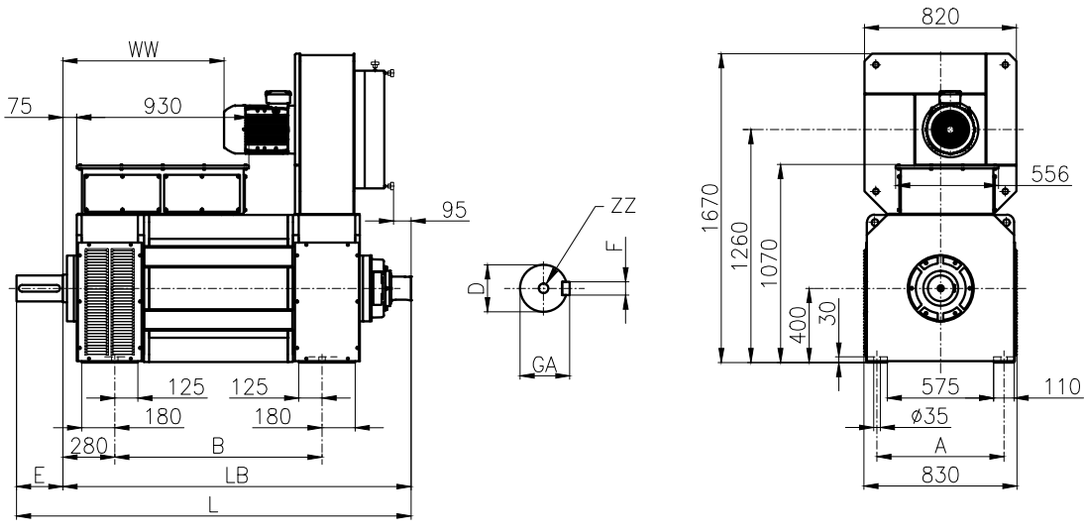

3294/0

MQ400 IP54/IP23-PVA

Flange dimensions refer to B35 version available on request

Type	A	B	D	E	F	GA	L	LB	WW	ZZ
MQ400 S	686	1120	Ø 140m6	250	36	148	2150	1900	870	M24
MQ400 M	686	1220	Ø 140m6	250	36	148	2250	2000	970	M24
MQ400 L	686	1320	Ø 140m6	250	36	148	2350	2100	1070	M24

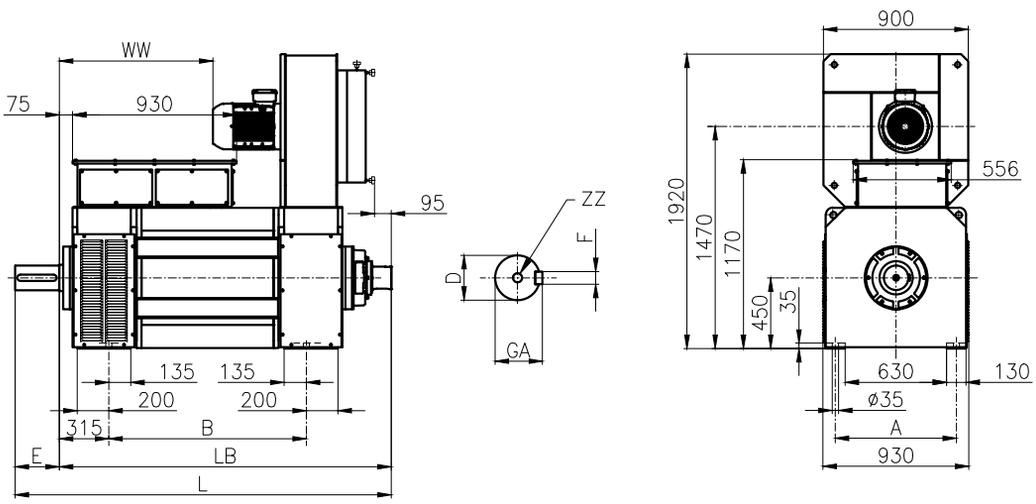

3295/0

MQ450 IP54/IP23-PVA

Flange dimensions refer to B35 version available on request

Type	A	B	D	E	F	GA	L	LB	WW	ZZ
MQ450 S	800	1200	Ø 160m6	300	40	169	2400	2100	920	M30
MQ450 M	800	1300	Ø 160m6	300	40	169	2500	2200	1020	M30
MQ450 L	800	1450	Ø 160m6	300	40	169	2650	2350	1170	M30

Overall Dimension

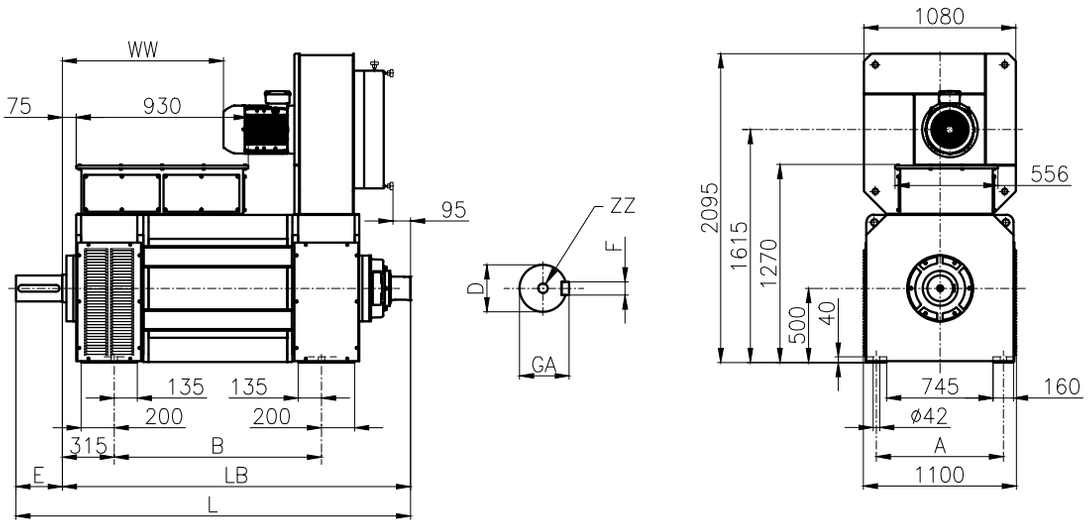

3296/0

MQ500 IP54/IP23-PVA

Flange dimensions refer to B35 version available on request

Type	A	B	D	E	F	GA	L	LB	WW	ZZ
MQ500 S	900	1350	Ø 180m6	300	45	190	2550	2250	1070	M36
MQ500 M	900	1500	Ø 180m6	300	45	190	2700	2400	1220	M36
MQ500 L	900	1650	Ø 180m6	300	45	190	2850	2550	1370	M36

IM Mounting arrangements

The motors can be manufactured in the mounting arrangements indicated in the following table, according to the IEC 60034-7 and CEI EN 60034-7 Std.
Special flanges are available on request.
The standard supply of vectorial motors concerns IM1001 (B3) form.
For other constructive forms and for mounting with vertical axe, please ask our sales Dpt.

Motors with feet			Motors with through holes flange		
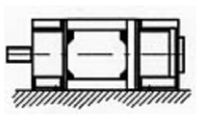	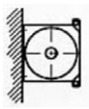	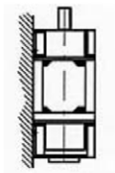		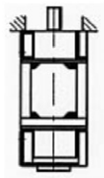	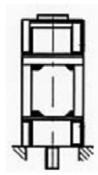
IM B3 IM1001	IM B6 IM1051	IM V6 IM1031	IM B5 IM3001	IM V3 IM3031	IM V1 IM3011
Motors with feet			**Motors with feet and through holes flange**		
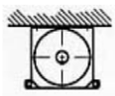	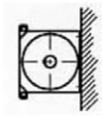	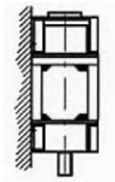		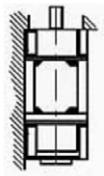	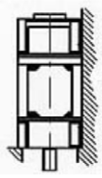
IM B8 IM1071	IM B7 IM 1062	IM V5 IM1011	IM B35 IM2001	IM V35 IM2031	IM V15 IM2011

In IM B5 execution it is necessary to use a support under the opposite side shield for the longer lengths.
If it is not possible to provide the support, please contact our sale Dpt. for other mechanical solutions.
In the following table, standard and optional configurations of MQ motors are shown, according to the type of coupling to the load (coupling or pulley)

RECOMMENDED MOUNTING POSITIONS				
C COUPLING P PULLEY	1	2	3	4
	B 35 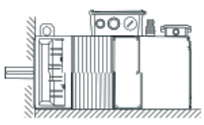	**B 3** 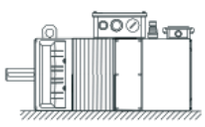	**B 5** 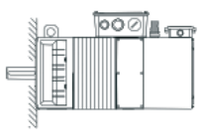	**B 5 + supp** 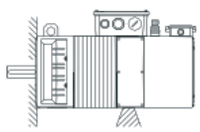

FRAME	K	S	M	L	P	X
80	C or P ...1,2,3,4				C ...1,2,4 - P ...1,4	
100 IP54	C or P ...1,2,3,4			C or P ...1,2,4		
100 IP23	C or P ...1,2,3,4				C ...1,2,4 - P ...1,4	
132, 160	C or P ...1,2,3,4			C or P ...1,2,4		
180, 225, 280, 315 355, 400, 450, 500	C or P ...1,2,4					

Transmission

Follow the notes below for a proper motor selection

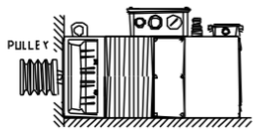

For application with pulley, the DE roller bearing option is required, see paragraph of "Bearings for high radial loads".

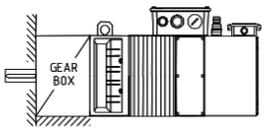

For application with hollow shaft gearbox (without flexible coupling) choose the ball bearing solution for DE.

Bearings: standard execution

As standard there are rigid radial ball bearings on both sides and one of these bearings is axially locked.
The bigger frame sizes (400, 450 and 500) have a roller bearing on drive end side and a ball bearing on the opposite side.

Type	Standard bearings			
	DE bearing	NDE bearing	Max continuous speed g/1' - rpm	Max speed g/1' - rpm
80	6306 ZZ	6205 ZZ	6300	9000
MQ 100 IP54-PVAP	6308 ZZ C3	6208 ZZ C3	5600	8000
MQ 100 IP23-PVA	6209 ZZ C3	6207 ZZ	5250	7500
AW 100	6308 ZZ	6207 ZZ	5500	7850
MQ 132	NU210 ECP + 6210 C3	6210 ZZ C3	4900	7000
AW 132	6309 ZZ C3	6209 ZZ C3	4700	6700
MQ 160	NU2211 EC + 6211 C3	6211 ZZ C3	4200	6000
AW 160	6312 ZZ C3	6311 ZZ C3	3700	5300
MQ 180	6313 ZZ C3	6311 2Z C3	3150	4500
AJ 180	6314 ZZ C3	6214 ZZ C3	3000	4300
AW 180	6314 C3	6312 C3	3000	4300
MQ 225	6218 ZZ C3	6216 ZZ C3	2450	3500
AJ/AW 225	6318 C3	6315 C3	2350	3400
MQ/AW/AJ 280	6222 C3	6222 C3	2100	3000
MQ 315	6324 C3	6324 C3	2000	2600
MQ 355	6326 C3	6326 C3	1500	2200
MQ 400	NU230-C3	6228-C3	1400	2000
MQ 450	NU234-C3	6230-C3	1250	1800
MQ 500	NU238-C3	6234-C3	1200	1700

AJ = low inertia version - AW = liquid cooled version

Bearings: solutions for high radial loads

On request, special bearings (roller) can be mounted on the drive side (see table). For the motors supplied with the roller bearing option, the maximum speed datum (nmax) must be reduced due to the lower maximum speed allowed by this typology of bearings. Furthermore, a minimum radial load is required to assure a correct working.
For further details, please ask our sales Dpt.

Maximum radial loads that can be applied at the motors shaft ends are shown on the table. These values are for air cooled motors and the figures are approximated. For critical cases, please always contact us directly. These values are referred to a maximum life of the bearings, calculated according to ISO 281, of ≥ 20.000 hours of continuous operation at indicated speed. Data and operating hours are calculated for normal operating conditions, without vibrations and with temperatures within the limits imposed by the bearing manufacturers. It is therefore possible that, in some operating conditions, the life span of the bearings could be shorter.

Type	DE bearings	Max continuous speed g/1' - rpm	Max speed g/1' - rpm	Max radial load	
				X Distance mm	Fr @ 1500RPM (1) N
80	NJ 306 EC	5600	8000	30/60	1800/1500
MQ 100 IP54-PVAP	6308 ZZ C3	5600	8000	40/80	2390/2090
MQ 100 IP23-PVA	NJ 209 EC	4700	6700	40/80	3100/2700
AW 100	NJ 308 EC	4550	6500	40/80	3100/2700
MQ 132	NU210 ECP + 6210 C3	4900	7000	55/110	5000/4370
AW 132	NJ 309 EC	4400	6300	55/110	4850/4300
MQ 160	NU2211 EC + 6211 C3	4200	6000	55/110	7900/6810
AW 160	NU 312 EC	3350	4800	55/110	7000/6000
MQ180	NU313 ECP	2800	4000	70/140	13200/7970
AJ 180	NU 214 C3	3150	4500	70/140	9800/7000
AW 180	NU 314	2800	4000	70/140	9800/7000
MQ 225	NU 218 ECP	2500	3500	70/140	14200/10790
AJ/AW 225	NU 318 C3	1950	2800	70/140	12000/11000
MQ 280	NU 222 ECP	1950	2800	105/210	22000/20560
AJ/AW 280	NU 222 EC	1950	2800	105/210	15000/13000
MQ 315	NU 324 C3	2000	2600	105/210	59000/55000
MQ 355	NU 326	1550	2000	please ask our sales dpt	
MQ 400	NU 324 C3	2000	2600		
MQ 450	NU 326	1550	2000		
MQ 500	NU 326	1550	2000		

(1) Over this speed the admissible radial loads decreases: please ask our Sales Dpt.

To calculate the radial load please see the following method:

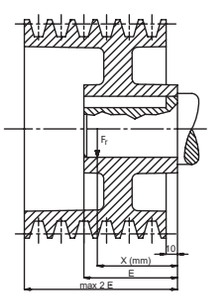

$$Fr = 2040 \times \frac{C}{D} \times k$$

where:
Fr radial load in [N]
C motor torque in [Nm]
D pulley diameter in [mm]
k tensile factor specified by pulley manufacurer and corrisponding about to:
k=1 for toothed belts
k=2.3 for trapeizodal belts
k=3.8 for flat belts

Ventilation and electrofan characteristics

There are three-phase electrofans whose characteristics depend on the ventilation system adopted.
The following table shows the characteristics of the standard cooling fans. Other supply conditions can be provided upon specific request.

Motor type	Cooling type	Phases	Power kW	Frequency 50 Hz			Frequency 60 Hz			Air flow m3/sec	Pressure Pa
				Voltage V	Current A	Noise level dBa	Voltage V	Current A	Noise level dBa		
MQ 80	IP54 PVAP	1	0,048	220-230	0,30	53	230	0,30	53	0,06	380
	IP23 PVAP	3	0,07	Y 400 Δ 230	0,27 0,47	68	Y 460 Δ 265	0,27 0,47	68	0,06	380
MQ 100	IP54 PVAP[1)]	3	0,045	345-440	0,19	66	345-460	0,12	70	0,06	107
	IP54 PVAP[1)]	3	0,045	200-255	0,33	66	200-265	0,21	70	0,06	107
	IP23 PVA	3	0,09	Y 400 Δ 230	0.3 0.5	72	Y 460 Δ 265	0.3 0.5	72	0,1	470
MQ 132	IP54 PVAP[1)]	3	0,11	345-480	0,34	74	345-480	0,31	78	0,18	150
	IP54 PVAP[1)]	3	0,11	200-275	0,59	74	200-255	0,54	78	0,18	150
	IP23 PVA	3	0,25	380-415 220-240	0.63 1.1	75	380-480 220-280	0.63 1,1	79	0,23	830
MQ 160	IP54 PVAP[1)]	3	0,17	380-400	0,44	78	380-400	0,5	80	0,28	190
	IP54 PVAP[1)]	3	0,17	220-230	0.76	78	220-230	0.87	80	0.28	190
	IP23 PVA	3	1,1	300-460 175-265	2,6 4,5	78	360-510 210-290	2,6 4,5	82	0,3	1115

Motor type	Cooling type	Phases	Power kW	Frequency 50 Hz			Frequency 60 Hz			Air flow m3/sec	Pressure Pa
				Voltage V	Current A	Noise level dBa	Voltage V	Current A	Noise level dBa		
MQ 180	IP54 PVAP1)	3	0,17	380-400	0,44	78	380-400	0,5	80	0,28	190
	IP23/IP54 PVA	3	2,2	Y 380-415 Δ 220-240	4,51 7,84	80	Y 380-480 Δ 220-280	4,51 7,84	84	0,56	1070
AJ 180[2)]	IP23 PVA	3	1.1	Y 400 Δ 230	2.9 5.0	84.5	-	-	-	0.5	1400
	IP23 PVA	3	1.3	-	-	-	Y 460 Δ 265	2.9 5.0	84.5	0.5	1400
MQ 225 [2)]	IP23/IP54 PVA	3	3	Y 380-400 Δ 220-230	6,0 10,4	86	-	-	-	0,83	2810
	IP23/IP54 PVA	3	3	-	-	-	Y 460-480 Δ 265-276	4,51 7,85	87	0,83	2810
AJ 225[2)]	IP23 PVA	3	2.2	Y 400 Δ 230	5.5 9.5	85	-	-	-	-	-
	IP23 PVA	3	2.6	-	-	-	Y 460 Δ 265	5.5 9.5	-	-	-
MQ 280 [2)]	IP23/IP54 PVA	3	3	Y 380-400 Δ 220-230	6,5 11,3	86	-	-	-	0,98	2540
	IP23/IP54 PVA	3	3	-	-	-	Y 460-480 Δ 265-276	6,5 11,3	86	0,98	2540
AJ 280[2)]	IP23 PVA	3	4	Y 400 Δ 230	8,9 15.4	85	-	-	-	1,25	2200
	IP23 PVA	3	4.8	-	-	-	Y 460 Δ 265	8,9 15.4	85	1,25	2200
315 [2)]	IP23/IP54 PVA	3	4	Y 400 Δ 230	8,9 15.4	85	-	-	-	1,25	2200
	IP23/IP54 PVA	3	4.8	-	-	-	Y 460 Δ 265	8,9 15.4	85	1,25	2200
355	IP23/IP54 PVA	3	5,5	Y 400 Δ 230	11,1 19.2	88	-	-	-	1,75	2300
400	IP23/IP54 PVA	3	7,5	Y 400 Δ 230	15 26	88	-	-	-	2,30	2300
450	IP23/IP54 PVA	3	9	Y 400 Δ 230	18,4 32	88	-	-	-	2,60	2400
500	IP23/IP54 PVA	3	11	Y 400 Δ 230	23,2 40	88	-	-	-	3,00	2500

NOTES:
1) When ordering, it is necessary to define the fan voltage (connection Y or Δ) since the connection cannot be modified later.
2) Different electrofans are foreseen for 50Hz and 60Hz.
Y/Δ) It indicates when the connection star-delta is possible inside the terminal box

Other supply characteristics are available upon request
IP23 motors are supplied with a filter for the inlet air.
IP54 motors with radial fan are supplied with a filter for the inlet air on frame sizes 180-500.

Thermal protectors

As standard, the thermal protection of the motor is carried out through 3 bimetallic (PTO) thermal protectors, connected in series and incorporated in the windings.
Other types of thermal protectors or temperature probes (PTC - PT100, etc.) are available on request.

Cooling of the motors, ambient temperature and altitude of installation

The power/torque values indicated on the catalogue are referred to the motor shaft, for continuous duty, max ambient temperature 40°C, altitude not higher than 1000 m.a.s.l., inverter supply. For different environmental conditions, the power varies as follows.

Motors derating according to temperature and altitude of installation

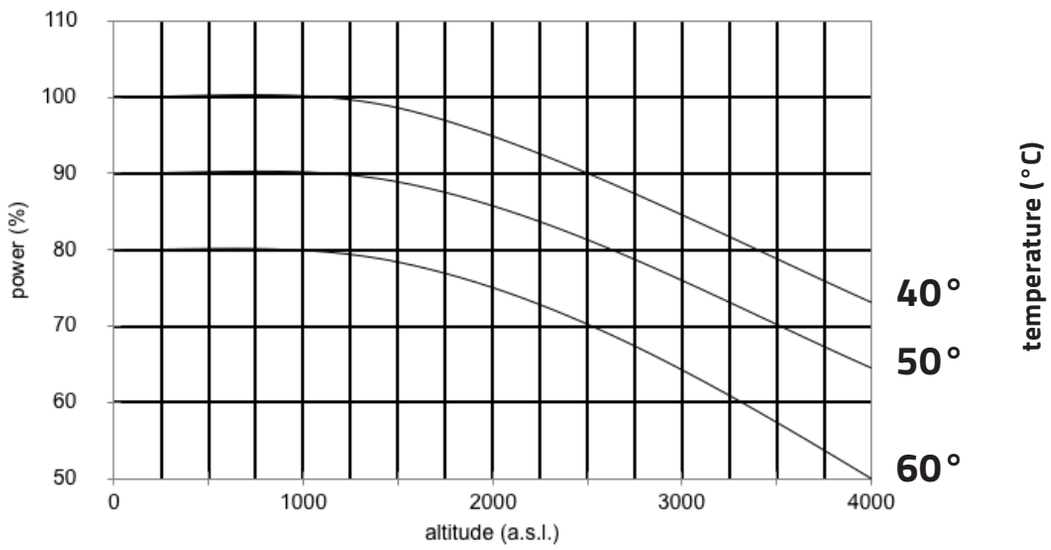

Painting

The standard finish includes pre-treatment with two-component epoxy primer which is suitable for any other finish paint. Special paint finishes can be provided upon request.

Standard rules

MQ motors are manufactured in fully accordance with standard CEI EN60034-1 and they comply with IEC 34-1, therefore in according with the rules of the principal European countries.

All the motors in this catalogue satisfy the requisites of the following Directives
-2014/35/EU Low Voltage Directive

Reference has also been made to the following directives within the limits as per the following description:
-EMC 2014/30/EU (Electromagnetic Compatibility) Directive
-Machine Directive 2006/42/CE

The electric motors/generators are components that are incorporated into other machines, systems and plants, therefore the resulting EMC behaviour is under the responsibility of the Manufacturer of the machine or plant incorporating the motor/generator. With reference to the 2006/42/EC Directive, it must be specified that the motors/generators must be installed in compliance with the installation instructions and cannot be put into service until the machine in which they are incorporated has been declared in compliance with the 2006/42/EC Machinery Directive.

Balancing of the rotor and vibrations

Shaft is supplied with full key (but balancing is carried out with half key, according to ISO 2373).
The degree of vibration complies to the A class (equivalent to old R class) in order to guarantee low vibrations even at very high speeds.
On request, for special applications, it is possible to balance the rotor according to B class (equivalent to old S class) or to balance it with full key.
The vibration values indicated in the following table refer to the IEC 60034-14 and CEI EN 60034-14 Std.
The maximum vibration level is expressed in mm/s RMS and it is valid for the free suspension measuring method or for motor placed on rubber (Free Suspension) and clamped directly to a solid floor (Rigid mounting). The classification is carried out by balancing class, rotation speed and shaft height.

Max. effective value of vibration

Class	Mounting	H ≤ 132 mm/s	132 < H ≤ 280 mm/s	280 < H ≤ 500 mm/s
A*	Free suspension	1.6	2.2	2.8
	Rigid mounting	1.3	1.8	2.3
B	Free suspension	0.7	1.1	1.8
	Rigid mounting	-	0.9	1.5

* Classe standard di equilibratura / Standard balancing class

For speed higher than 3600RPM, refer to rigid mounting values/conditions.

Terminal box and terminal board

As standard it is provided a terminal box of the motor containing the main terminal block and also the connections for thermistors and for earthing connection. The motors of electrofan have a separate terminal box or a dedicated connector for MQ100/MQ132/MQ160/MQ180 IP54-PVAP. All terminal boxes are supplied already drilled, with plugs (the Customer will have to replace them according to its own needs).

Standard position is showed on the overall dimension drawing.
Different positions are available on request, compatibly with the mechanical structure of the motor:
in this case, please ask our sales Dpt.

STANDARD CONNECTIONS (STAR)

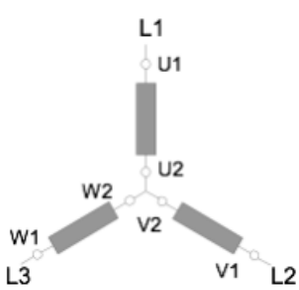

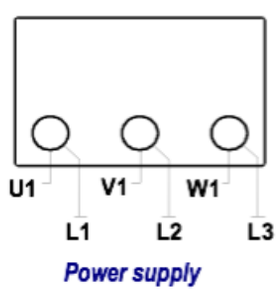

Speed transducers (Encoder)

Normally, a hollow shaft transducer is used, in order to reduce the dimensions and guarantee a perfect mechanical connection with the shaft.
The body of the transducer is fixed to the back cover of the motor and it has the possibility to oscillate by means of a reaction arm which has the task to absorb possible axial/radial misalignments.
All the transducers are provided with circular connector.
The motor can be supplied complete of one of the following transducers:

1	**1024 1) ppr; incremental signals A, -A and B, -B ; zero pulse, power supply 5VDC or 5÷32VDC; electronic output: TTL (5VDC) or HTL (5÷32VDC like power supply)**
2	**Sine/Cosine 1 period absolute Waves/rev.; 2048 ppr incremental signals A, -A and B, -B zero pulse; power supply 5VDC; electronic output: sine-cosine 1Vpp**

1) giro 1024 is the standard optimized solution, other numbers of ppr are available upon request

Different transducers provided by the Customers can be installed if they are compatible with the mechanical structure of the motor.

Type and Routine tests

Type tests are carried out on the first motor of a series, and then the values revealed are used as reference during the routine tests of the following ones having same characteristics.
We use test benches equipped with frequency converters, in order to test the motors at the speed and frequency that will be used by the customer; moreover, procedures and measuring equipments are compliant with the last regulations about variable frequency and PWM.
All motors and components are subjected to routine tests during the manufacturing and at the end of the production cycle.

Accessories

Hereafter the most common options available upon request:

UL Certification

The MQ asynchronous motors can be provided with insulation system compliant with UL (1004, for rotating electrical machines). Some frame sizes are available with UL certification of complete motor.
Beware: not all the accessories are available with this marking. Therefore we kindly ask you to get in contact with our sales Dept. for a feasibility evaluation and relative quotation.

Brakes

The motor complete with an holding/emergency brake is available on request for 100-280 framesizes. This auxiliary brake is of electromechanical type with springs, low inertia with braking action in case of loss of supplying, it has a strong structure that allows a good heat dissipation.
It is inside the motor on MQ 80-280 IP54 PVAP, outside for the other framesizes/solutions.

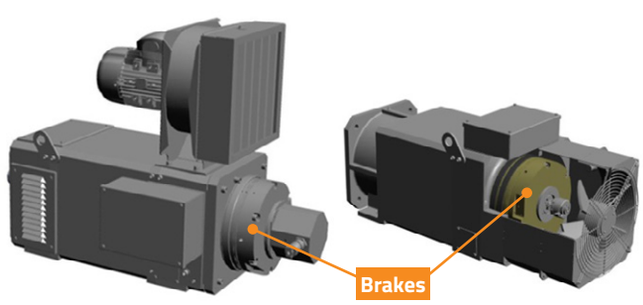

Motor	Brake Model	Static Braking Torque	Max Speed of the motor	Power supply	Input Power	Additional moment of inertia	Max energy at 1 insert./hour	'L' dimension increasing	Additional weight
		Nm	RPM [2]	Vdc	W	kgcm²	kJ	mm	kg
MQ 80	R30	30	6000	96	24	3	12	80	3
MQ 100 IP54	K5	40	3600	24	45	7	27	115	4,8
	K6	60	3600	24	50	7	38	115	7
	BFK458.12N	46	3600	24	40	5	24	115	12
MQ 100 IP23	K6	60	3600	96	50	7	38	80	7
	BFK - E14	80	3600	96	50	7	30	80	13
MQ 132 IP54	K7	90	3600	24	55	30	36	130	12
	K7/D [1]	180	3600	24	55	60	100	155	15
	BFK458.16N	125	3600	24	55	17	36	130	15
	BFK458.18N	235	3600	24	85	32	60	130	18
MQ 132 IP23	K7	90	3600	24	55	30	36	130	12
	K7/D [1]	180	3600	24	55	60	100	155	15
	K8/D [1]	400	1800	24	60	120	100	128	18
	BFK458.16N	125	3600	24	55	17	36	140	24
	BFK458.18N	235	3600	24	85	32	60	145	28
MQ 160 IP54	K9	300	1800	24	65	89	90	130	23
	K9/D [1]	600	1800	24	65	178	215	130	28
	BFK458.20N	400	3600	24	100	80	80	130	26
MQ 160 IP23	K9	300	1800	24	65	89	90	130	23
	K9/D [1]	600	1800	24	65	178	215	130	28
	BFK458.18N	235	3600	24	85	32	60	145	32
	BFK458.25N	600	3000	24	110	220	120	150	65
	BFK468.25N	1000	3000	180(360)[3]	132(528)[3]	220	120	160	70
MQ 180 IP54/ IP23	K9/D [1]	600	1800	24	65	178	215	160	28
	NFF100	1000	2800	110	270	258	330	242	70
	BFK458.25N	600	3000	24	110	220	120	150	70
	BFK468.25N	1000	3000	180(360)[3]	132(528)[3]	220	120	160	105
MQ 225 IP54/ IP23	NFF100	1000	2800	110	270	258	330	242	70
	BFK468.25N	1000	3000	180(360)[3]	132(528)[3]	220	120	160	87
	BFK468.31N	2400	2300	180(360)[3]	230(920)[3]	500	300	210	125
MQ 280 IP54/ IP23	NFF250	2500	1900	110	400	239	500	100	165
	BFK468.31N	2400	2300	180(360)[3]	230(920)[3]	500	300	210	138

1) ATTENTION: for vertical mounting (V1, V3, etc.) please contact our sales office.
2) Other brakes with higher speeds are available on request.
3) Use a 6-terminal rectifier type BEG-561-440-130 with a supply voltage of 400 ÷ 440Vac and frequency 50 / 60Hz.

The brake during its operation generates heat according to the inertia to be braked and to the rotation speed. It is therefore important to check that the energy generated by the brake during the braking does not exceed the limit indicated in the table. The energy (L) is given by the following equation:

$$L = \frac{(Jm + Jf + Jc) \times n^2}{1824}$$

Jm = inerzia motore	*motor inertia*	(Kg/cm²)
Jf = inerzia freno	*brake inertia*	(Kg/cm²)
Jc = inerzia carico	*load inertia*	(Kg/cm²)
n = velocità	*speed*	(RPM)
L = Lavoro	*energy*	(kJ)

If the number of insertion per hour is higher than 1, max. dissipable energy decreases according to the number of insertion, therefore for particular requirements please contact our sales Dpt.

Anticondensation heaters

Anticondensation heaters are recommended and/or prescribed for machines installed in environments with high humidity or great fluctuation of the temperature. These are also foreseen for closed motors (IP54, IP55), if there is any risk of condensation inside the motor. The heating elements must be used only when the machine is not running. They must be disconnected when the motor is powered. Standard power supply is 1-ph, 230V, 50/60 Hz.

Ventilation failure detector

On request on motors with radial fan a ventilation failure detector can be supplied, to check the efficiency of the cooling system. This device is set in our testing room and the adjustment screw is sealed to prevent tampering.

Tropicalization

The treatment for tropicalization of windings consists of an additional painting with varnish containing mildew-preventing additives. This treatment is recommended for machines installed in environments with high humidity or great fluctuation of temperature.

Bearing temperature control sensor

On request a PT100 heat detector can be installed to check the bearings temperature.

Insulated bearings

On request electrically insulated bearings having external insulating coating or ceramic balls are available. This insulation stops the major part of shaft-current. Normally the insulated bearings are mounted on the non drive end.

Rotor earthing system

On request, brush for rotor earthing to prevent damages to bearings due to Eddy currents can be supplied.
Attention: brush for rotor earthing is not foreseen in all solutions; please contact our sales Dpt for an evalutation.

Special tests and/or witnessed tests

These can be carried out in accordance with the equipment existing in the factory and according to the agreements established when ordering.

Solutions with higher speed

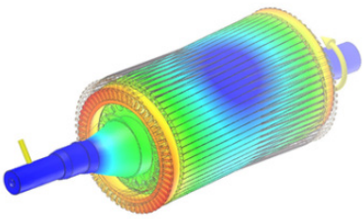

Our Company is able to satisfy specific customer's requests.
Thanks to our R&D department in which a lot of resources are involved, the company is able to evaluate products with excellent dynamic characteristics, related with customer's machine/application, thanks to advanced analysis of the project (magnetic harmonics, ripple, structural, frequency, buckling).

Here below it is reported an example of an asynchrounous motor with very remarkable deflux ratio and maximum speed.

Motor	Wind	nn rpm	Pn kW	Mn Nm	Vn V	In A	Fn Hz	n1 rpm	nmax rpm	Mmax rpm	J Kgm²	W kg
MQ 355M IP23		1000	500	4775	625	640	50	3000	3000	12000	29.09.00	2700

Notes

This catalogue gives general information about all sizes of MQ a.c. motors. Customers can determine whether a specific product is suitable for their needs and are thus responsible for the selection, use and results obtained by any product cited in this catalogue. The information contained in the present catalogue does not guarantee the characteristics for the use.
Products listed in this catalogue are exclusively designed and built for industrial purposes.

For particular cases in NON-industrial environments, or where other types of protection must be provided (for example against contact with children fingers, etc.), these guards or additional protections must be realized by the Customer.
Any non-observance of the rules for installation, use and maintenance or any modification/tampering with the motor makes the guarantee rights invalid and exempts manufacturer from any responsibility.

Any use of the motor differently from the specifications indicated in this catalogue does not involve any liability of manufacturer.
The company reserves the right to modify at any time and without notice the data, the technical characteristics, the dimensions, the weights and the illustrations.
The company refuses all responsibility for direct or indirect damages caused by possible errors and/or omissions in the present catalogue. The reproduction, even in part, of the present catalogue must be authorized in writing by the company.

Low inertia Motors

SICME|ORANGE1

Three-phase asynchronous motors with low inertia are designed and manufactured especially to meet high torque requirements and fast dynamics.

The motor is designed in order to minimize the inertia and to grant a high ratio between nominal torque and rotoric inertia values. These motors will allow very high accelerations and assure a dynamic functioning with little investement in terms of energy. Motor frame is square and done with laminated stator that integrates cooling ducts directly into the magnetic laminates. This leads to a very solid structure, compact and extremely efficient from the thermal point of view. Cooling system has been designed to allow its functioning also in hard environment conditions.

Electrical data and performances

Degree of protection: IP23
Cooling: IC06
Supply voltage from inverter: 3x400VRMS

Motor	Wind code	Nominal speed	Nominal power	Nominal torque	Maximum torque	Inertia	Nominal voltage	Nominal current	Nominal freq.	Maximum speed at Pn	Maximum speed	Weight
		nn [RPM]	Pn [kW]	Mn [Nm]	Mmax [Nm]	J [kgm²]	Vn [VRMS]	In [ARMS]	Fn [Hz]	n1 [RPM]	nmax [RPM]	W [kg]
AJAr180S	E2	500	30,4	580	1100	0,391	400	72,2	25	600	4300	370
	E3	580	35,2	580	1100	0,391	400	82,8	29	700	4300	370
	E4	650	39,5	580	1100	0,391	400	89,5	33	800	4300	370
	E1	1000	58,3	557	1100	0,391	400	129	50	1200	4300	370
AJAr180M	E2	500	41,9	800	1500	0,536	400	99,6	25	600	4300	460
	E3	580	48,6	800	1500	0,536	400	114	29	700	4300	460
	E4	650	54,5	800	1500	0,536	400	123	33	800	4300	460
	E1	1000	80,4	768	1500	0,536	400	178	50	1200	4300	460
AJAr180L	E2	500	49,7	950	1800	0,619	400	118	25	600	4300	520
	E3	580	57,7	950	1800	0,619	400	136	29	700	4300	520
	E4	650	64,7	950	1800	0,619	400	147	33	800	4300	520
	E1	1000	95,5	912	1800	0,619	400	211	50	1200	4300	520
AJAr180P	E2	500	55	1050	2000	0,69	400	131	25	600	4300	560
	E3	580	63,8	1050	2000	0,69	400	150	29	700	4300	560
	E4	650	71,5	1050	2000	0,69	400	162	33	800	4300	560
	E1	1000	106	1008	2000	0,69	400	234	50	1200	4300	560
AJAr180X	E2	500	62,9	1200	2250	0,79	400	149	25	600	4300	640
	E3	580	72,9	1200	2250	0,79	400	171	29	700	4300	640
	E4	650	81,7	1200	2250	0,79	400	185	33	800	4300	640
	E1	1000	121	1152	2250	0,79	400	267	50	1200	4300	640
AJAr225M	E2	500	61,8	1180	2240	0,96	400	143	25	600	3400	800
	E3	580	71,7	1180	2240	0,96	400	164	29	700	3400	800
	E4	650	80,3	1180	2240	0,96	400	180	33	800	3400	800
	E1	1000	119	1133	2240	0,96	400	259	50	1200	3400	800
AJAr225L	E2	500	73,3	1400	2660	1,12	400	170	25	600	3400	880
	E3	580	85	1400	2660	1,12	400	195	29	700	3400	880
	E4	650	95,3	1400	2660	1,12	400	213	33	800	3400	880
	E1	1000	141	1344	2660	1,12	400	308	50	1200	3400	880
AJAr225P	E2	500	86,4	1650	3100	1,25	400	200	25	600	3400	1000
	E3	580	100	1650	3100	1,25	400	230	29	700	3400	1000
	E4	650	112	1650	3100	1,25	400	251	33	800	3400	1000
	E1	1000	166	1584	3100	1,25	400	363	50	1200	3400	1000
AJAr225X	E2	500	102	1950	3700	1,47	400	237	25	600	3400	1180
	E3	580	118	1950	3700	1,47	400	271	29	700	3400	1180
	E4	650	132	1950	3700	1,47	400	297	33	800	3400	1180
	E1	1000	196	1872	3700	1,47	400	428	50	1200	3400	1180

Degree of protection: IP23
Cooling: IC06
Supply voltage from inverter: 3x400VRMS

SICME|ORANGE1

Motor	Wind code	Nominal speed	Nominal power	Nominal torque	Maximum torque	Inertia	Nominal voltage	Nominal current	Nominal freq.	Maximum speed at Pn	Maximum speed	Weight
		nn [RPM]	Pn [kW]	Mn [Nm]	Mmax [Nm]	J [kgm²]	Vn [VRMS]	In [ARMS]	Fn [Hz]	n1 [RPM]	nmax [RPM]	W [kg]
AJAr280S	E2	500	85,9	1640	3100	1,37	400	208	25	600	3000	1300
	E3	580	100	1640	3100	1,37	400	238	29	700	3000	1300
	E4	650	112	1640	3100	1,37	400	264	33	800	3000	1300
	E1	1000	165	1574	3100	1,37	400	386	50	1200	3000	1300
AJAr280M	E2	500	104	1980	3700	1,65	400	251	25	600	3000	1450
	E3	580	120	1980	3700	1,65	400	288	29	700	3000	1450
	E4	650	135	1980	3700	1,65	400	319	33	800	3000	1450
	E1	1000	199	1901	3700	1,65	400	466	50	1200	3000	1450
AJAr280MX	E2	500	115	2200	4100	1,82	400	279	25	600	3000	1580
	E3	580	134	2200	4100	1,82	400	320	29	700	3000	1580
	E4	650	150	2200	4100	1,82	400	354	33	800	3000	1580
	E1	1000	221	2112	4100	1,82	400	517	50	1200	3000	1580
AJAr280L	E2	500	127	2420	4500	1,97	400	307	25	600	3000	1650
	E3	580	147	2420	4500	1,97	400	352	29	700	3000	1650
	E4	650	165	2420	4500	1,97	400	390	33	800	3000	1650
	E1	1000	243	2323	4500	1,97	400	569	50	1200	3000	1650
AJAr280P	E2	500	138	2640	5000	2,14	400	335	25	600	3000	1800
	E3	580	160	2640	5000	2,14	400	384	29	700	3000	1800
	E4	650	180	2640	5000	2,14	400	425	33	800	3000	1800
	E1	1000	265	2534	5000	2,14	400	621	50	1200	3000	1800
AJAr280PX	E2	500	150	2865	5400	2,34	400	363	25	600	3000	1950
	E3	580	174	2865	5400	2,34	400	417	29	700	3000	1950
	E4	650	195	2865	5400	2,34	400	462	33	800	3000	1950
	E1	1000	289	2760	5400	2,34	400	674	50	1200	3000	1950

The values of frequencies are only indicative

Overall Dimension

3252/0

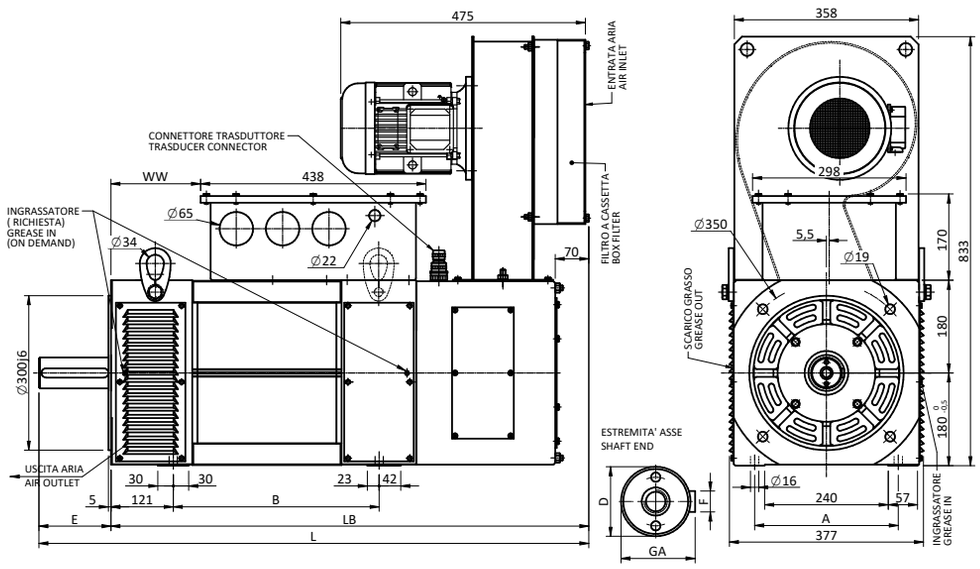

AJ180 IP23-PVA

Flange dimensions are referred to B35 version foreseen upon request

Type	A	B	D	E	F	GA	L	LB	WW	ZZ
AJ180 S	279	400	Ø 60m6	140	18h9	64	1073	933	174	M20
AJ180 M	279	520	Ø 65m6	140	18h9	69	1193	1053	294	M20
AJ180 L	279	590	Ø 65m6	140	18h9	69	1263	1123	364	M20
AJ180 P	279	640	Ø 65m6	140	18h9	69	1313	1173	414	M20
AJ180 X	279	710	Ø 65m6	140	18h9	69	1383	1243	484	M20

3253/0

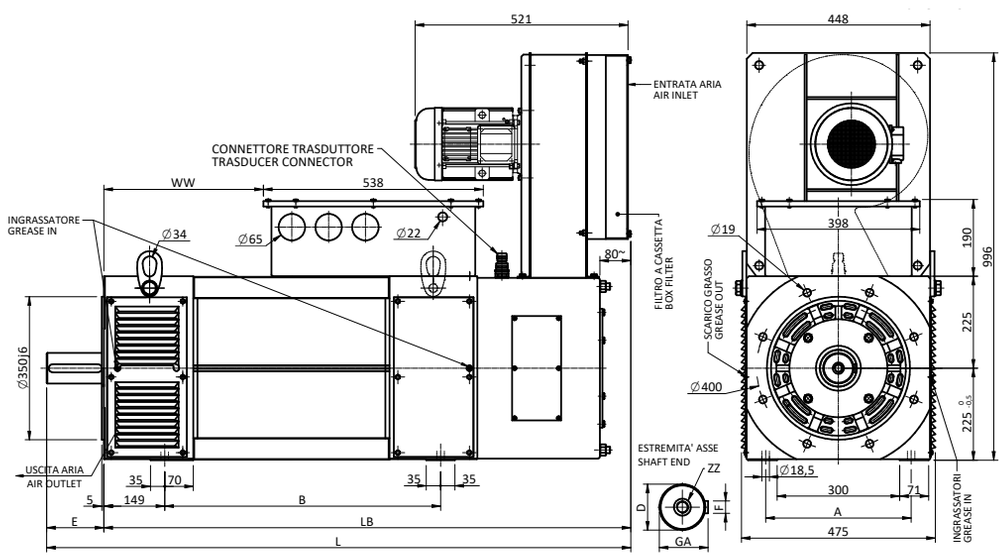

AJ225 IP23-PVA

Flange dimensions are referred to B35 version foreseen upon request

Type	A	B	D	E	F	GA	L	LB	WW	ZZ
AJ225 M	356	675	Ø 75m6	140	20h9	79.5	1434	1294	390	M20
AJ225 L	356	725	Ø 75m6	140	20h9	79.5	1484	1344	440	M20
AJ225 P	356	803	Ø 85m6	170	22h9	90	1592	1422	518	M20
AJ225 X	356	923	Ø 85m6	170	22h9	90	1712	1542	638	M20

Overall Dimension

3254/0

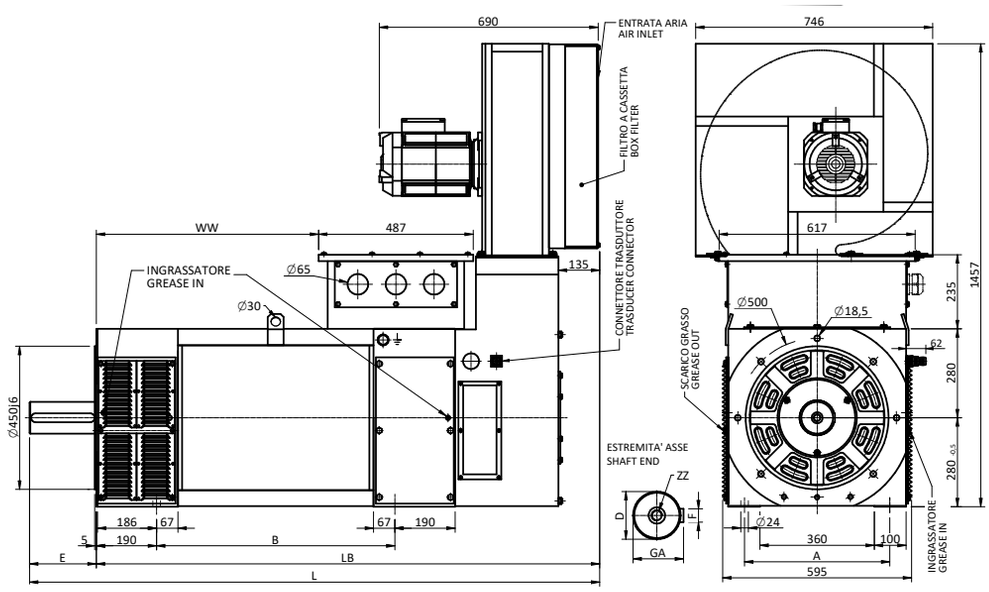

AJ280 IP23-PVA

Flange dimensions are referred to B35 version foreseen upon request

Type	A	B	D	E	F	GA	L	LB	WW	ZZ
AJ280 S	457	560	Ø 100m6	210	28h9	106	1610	1400	510	M24
AJ280 M	457	640	Ø 100m6	210	28h9	106	1690	1480	590	M24
AJ280 MX	457	700	Ø 100m6	210	28h9	106	1750	1540	650	M24
AJ280 L	457	750	Ø 100m6	210	28h9	106	1800	1590	700	M24
AJ280 P	457	810	Ø 100m6	210	28h9	106	1860	1650	760	M24
AJ280 PX	457	870	Ø 100m6	210	28h9	106	1920	1710	820	M24

Accessories:
The same options available for the MQ series can be provided for this series.

Liquid cooled asynchronous motors AW series

The AW liquid cooled series asynchronous motors have been specially designed and manufactured to satisfy the need for high torque and high dynamic performance typical of some high performances application, in particular for application in harsh environments.

The main innovation is in the external aluminium structure which carries out the functions of the frame and integrates the cooling system, by the forced circulation of the cooling liquid.

These new motors give very high specific power output in relation to the size and the degree of the protection of the motor (IP55).

The motor, very compact and with a regular shape, makes the integration into the machine structure very easy and can be used with no derating even in particularly aggressive and harsh environmental conditions with extreme temperatures and contaminated air.

Main characteristics:
- High power/torque density
- Reduced overall dimensions
- Modern design
- Small moment of inertia of the rotor
- Maintenance free
- High rotation speed
- Peak and continuous torque available even at zero speed
- High precision of rotation speed
- High protection and mechanical robustness
- Reduced number of components
- Optimized cooling system
- Cooling pipeline and speed transducer incorporated in the motor structure
- Perfect integration in the structure of the machine
- It can be used in aggressive environment
- Very quiet

The AW VECTOR-SPEED motors are manufactured in 6 sizes with aluminium housing (100-132-160-180-225-280), with power ranging from 7.5 to 471kW at 1500rpm.
They are available with IP54, IP55 and IP56 protection degree.
The hollow shaft speed transducer is integrated within the structure of the motor in order to contain the size requirements.
As option, frames 100-225 can have parking brake.

The noise level of the AW VECTOR-SPEED motors are within the limits imposed by the IEC 60034-9 and CEI EN 60034-9 Std (measurement with sinusoidal feed). As they are liquid cooled, these motors are intrinsically very silent. Values are lower than 75dBA.

Sectors of use and fields of application

Typical fields of application:
- Extruders for plastic, rubber and foods
- Metalworking machine
- Plastic injection machines
- Paper and cardboard production lines
- Machine tools
- Printing machines
- Systems for testing motors and transmissions
- Electric traction and propulsion

Degree of protection: IP54
Cooling: IC9W7
Supply voltage from inverter: 3x400VRMS

SICME|ORANGE1

Motor	Wind code	Nominal speed	Nominal power	Nominal torque	Maximum torque	Inertia	Nominal voltage	Nominal current	Nominal freq.	Maximum speed at Pn	Maximum speed	Weight
		nn [RPM]	Pn [kW]	Mn [Nm]	Mmax [Nm]	J [kgm²]	Vn [VRMS]	In [ARMS]	Fn [Hz]	n1 [RPM]	nmax [RPM]	W [kg]
AW100M	E2	580	3,2	52,3	70	0,0113	400	7,6	19,3	1000	7500	60
	E1	1000	5,2	49,9	70	0,0113	400	11,5	33,3	1700	7500	60
	F1	1500	7,5	47,5	70	0,0113	400	15,9	50	2500	7500	60
	F2	1800	9	47,5	70	0,0113	400	19,1	60	3000	7500	60
	G1	2200	10,1	43,7	70	0,0113	400	21,3	73,3	3600	7500	60
	G2	2600	11	40,4	70	0,0113	400	23,2	86,6	4300	7500	60
AW100L	E2	580	4,5	73,7	95	0,0144	400	10,9	19,3	1000	7500	75
	E1	1000	7,4	70,4	95	0,0144	400	16,4	33,3	1700	7500	75
	F1	1500	10,5	67	95	0,0144	400	22,8	50	2500	7500	75
	F2	1800	12,6	67	95	0,0144	400	27,3	60	3000	7500	75
	G1	2200	14,2	61,6	95	0,0144	400	30,5	73,3	3600	7500	75
	G2	2600	15,5	57	95	0,0144	400	33,1	86,6	4300	7500	75
AW100X	E2	580	6,4	105	140	0,0202	400	15,3	19,3	1000	7500	90
	E1	1000	10,5	100	140	0,0202	400	23,1	33,3	1700	7500	90
	F1	1500	15	95,5	140	0,0202	400	31,9	50	2500	7500	90
	F2	1800	18	95,5	140	0,0202	400	38,2	60	3000	7500	90
	G1	2200	20,2	87,9	140	0,0202	400	42,8	73,3	3600	7500	90
	G2	2600	22,1	81,2	140	0,0202	400	46,5	86,6	4300	7500	90
AW132S	E2	580	8,6	142	260	0,075	400	17,5	19,3	1000	6700	95
	E1	1000	14	134	260	0,075	400	27,2	33,3	1700	6700	95
	F1	1500	20	127	260	0,075	400	37,7	50	2500	6700	95
	F2	1800	24	127	260	0,075	400	45,1	60	3000	6700	95
	G1	2200	27	118	260	0,075	400	50,5	73,3	3600	6700	95
	G2	2600	29,6	109	260	0,075	400	54,8	86,6	4300	6700	95
AW132L	E2	580	12,8	211	380	0,109	400	26,4	19,3	1000	6700	120
	E1	1000	21	201	380	0,109	400	40,6	33,3	1700	6700	120
	F1	1500	30	191	380	0,109	400	56,2	50	2500	6700	120
	F2	1800	36	191	380	0,109	400	67,3	60	3000	6700	120
	G1	2200	40,5	176	380	0,109	400	75,3	73,3	3600	6700	120
	G2	2600	44,2	162	380	0,109	400	81,8	86,6	4300	6700	120
AW132P	E2	580	15,8	260	470	0,123	400	33,1	19,3	1000	6700	130
	E1	1000	26	248	470	0,123	400	50,2	33,3	1700	6700	130
	F1	1500	37	236	470	0,123	400	69,6	50	2500	6700	130
	F2	1800	44,5	236	470	0,123	400	83,2	60	3000	6700	130
	G1	2200	50	217	470	0,123	400	93,2	73,3	3600	6700	130
	G2	2600	54,6	201	470	0,123	400	101	86,6	4300	6700	130
AW132X	E2	580	18,3	301	540	0,151	400	37	19,3	1000	6700	150
	E1	1000	30	287	540	0,151	400	56,4	33,3	1700	6700	150
	F1	1500	43	274	540	0,151	400	78,2	50	2500	6700	150
	F2	1800	51,6	274	540	0,151	400	93,5	60	3000	6700	150
	G1	2200	58	252	540	0,151	400	105	73,3	3600	6700	150
	G2	2600	63,4	233	540	0,151	400	114	86,6	4300	6700	150
AW160M	E2	580	21,3	351	640	0,29	400	42,6	19,3	1000	5300	215
	E1	1000	35	334	640	0,29	400	66,5	33,3	1700	5300	215
	F1	1500	50	318	640	0,29	400	92,2	50	2500	5300	215
	F2	1800	60	318	640	0,29	400	110	60	3000	5300	215
	G1	2200	67,6	293	640	0,29	400	124	73,3	3600	5300	215
	G2	2600	73,8	271	640	0,29	400	134	86,6	4300	5300	215
AW160L	E2	580	25,5	420	760	0,341	400	49,3	19,3	1000	5300	240
	E1	1000	42	401	760	0,341	400	76,7	33,3	1700	5300	240
	F1	1500	60	382	760	0,341	400	106	50	2500	5300	240
	F2	1800	72	382	760	0,341	400	127	60	3000	5300	240
	G1	2200	81	351	760	0,341	400	143	73,3	3600	5300	240
	G2	2600	88,4	325	760	0,341	400	155	86,6	4300	5300	240
AW160P	E2	580	29,8	491	860	0,387	400	58,2	19,3	1000	5300	265
	E1	1000	49	468	860	0,387	400	90,7	33,3	1700	5300	265
	F1	1500	70	446	860	0,387	400	126	50	2500	5300	265
	F2	1800	84	446	860	0,387	400	150	60	3000	5300	265
	G1	2200	94,5	410	860	0,387	400	168	73,3	3600	5300	265
	G2	2600	103	379	860	0,387	400	183	86,6	4300	5300	265
AW160X	E2	580	36,1	595	1100	0,51	400	70,6	19,3	1000	5300	325
	E1	1000	59,5	568	1100	0,51	400	110	33,3	1700	5300	325
	F1	1500	85	541	1100	0,51	400	152	50	2500	5300	325
	F2	1800	102	541	1100	0,51	400	182	60	3000	5300	325
	G1	2200	115	498	1100	0,51	400	204	73,3	3600	5300	325
	G2	2600	125	460	1100	0,51	400	222	86,6	4300	5300	325

Degree of protection: IP54
Cooling: IC9W7
Supply voltage from inverter: 3x400VRMS

SICME|ORANGE1

Motor	Wind code	Nominal speed	Nominal power	Nominal torque	Maximum torque	Inertia	Nominal voltage	Nominal current	Nominal freq.	Maximum speed at Pn	Maximum speed	Weight
		nn [RPM]	Pn [kW]	Mn [Nm]	Mmax [Nm]	J [kgm²]	Vn [VRMS]	In [ARMS]	Fn [Hz]	n1 [RPM]	nmax [RPM]	W [kg]
AW180M	E2	580	46,8	771	1400	0,69	400	90,3	19,3	1000	4300	420
	E1	1000	77	736	1400	0,69	400	142	33,3	1700	4300	420
	F1	1500	110	701	1400	0,69	400	197	50	2500	4300	420
	F2	1800	132	701	1400	0,69	400	236	60	3000	4300	420
	G1	2200	148	644	1400	0,69	400	264	73,3	3600	4300	420
AW180L	E2	580	56,1	924	1700	0,81	400	108	19,3	1000	4300	480
	E1	1000	92,4	883	1700	0,81	400	171	33,3	1700	4300	480
	F1	1500	132	841	1700	0,81	400	237	50	2500	4300	480
	F2	1800	158	839	1700	0,81	400	283	60	3000	4300	480
	G1	2200	178	773	1700	0,81	400	317	73,3	3600	4300	480
AW180X	E2	580	61,7	1016	1850	0,99	400	119	19,3	1000	4300	540
	E1	1000	101	965	1850	0,99	400	188	33,3	1700	4300	540
	F1	1500	145	924	1850	0,99	400	260	50	2500	4300	540
	F2	1800	174	924	1850	0,99	400	311	60	3000	4300	540
	G1	2200	196	849	1850	0,99	400	348	73,3	3600	4300	540
AW225L	E2	580	68,1	1122	1900	1,99	400	132	19,3	1000	3400	760
	E1	1000	112	1070	1900	1,65	400	207	33,3	1700	3400	760
	F1	1500	160	1019	1900	1,65	400	287	50	2500	3400	760
	F2	1800	192	1019	1900	1,65	400	344	60	3000	3400	760
	G1	2200	216	938	1900	1,65	400	385	73,3	3400	3400	760
AW225P	E2	580	78,8	1298	2200	2,32	400	152	19,3	1000	3400	860
	E1	1000	130	1242	2200	1,91	400	240	33,3	1700	3400	860
	F1	1500	185	1178	2200	1,91	400	332	50	2500	3400	860
	F2	1800	222	1178	2200	1,91	400	398	60	3000	3400	860
	G1	2200	250	1086	2200	1,91	400	445	73,3	3400	3400	860
AW225X	E2	580	97,9	1613	2700	2,8	400	189	19,3	1000	3400	1000
	E1	1000	161	1538	2700	2,27	400	298	33,3	1700	3400	1000
	F1	1500	230	1465	2700	2,27	400	413	50	2500	3400	1000
	F2	1800	276	1465	2700	2,27	400	494	60	3000	3400	1000
	G1	2200	310	1348	2700	2,27	400	553	73,3	3400	3400	1000
AW280S	E2	580	102	1678	3500	3,68	400	195	19,3	1000	2800	1200
	E1	1000	168	1601	3500	3,68	400	310	33,3	1700	2800	1200
	F1	1500	240	1525	3500	3,68	400	430	50	2500	2800	1200
	F2	1800	287	1525	3500	3,68	400	514	60	2800	2800	1200
AW280M	E2	580	123	2030	4100	4,34	400	235	19,3	1000	2800	1400
	E1	1000	203	1937	4100	4,34	400	375	33,3	1700	2800	1400
	F1	1500	290	1845	4100	4,34	400	520	50	2500	2800	1400
	F2	1800	348	1845	4100	4,34	400	622	60	2800	2800	1400
AW280L	E2	580	145	2382	5400	5,25	400	276	19,3	1000	2800	1700
	E1	1000	238	2273	5400	5,25	400	440	33,3	1700	2800	1700
	F1	1500	340	2165	5400	5,25	400	610	50	2500	2800	1700
	F2	1800	408	2165	5400	5,25	400	730	60	2800	2800	1700
AW280P	E2	580	162	2662	6000	5,75	400	309	19,3	1000	2800	1900
	E1	1000	266	2541	6000	5,75	400	492	33,3	1700	2800	1900
	F1	1500	380	2420	6000	5,75	400	682	50	2500	2800	1900
	F2	1800	456	2420	6000	5,75	400	816	60	2800	2800	1900

The values of frequencies are only indicative

Overall Dimension

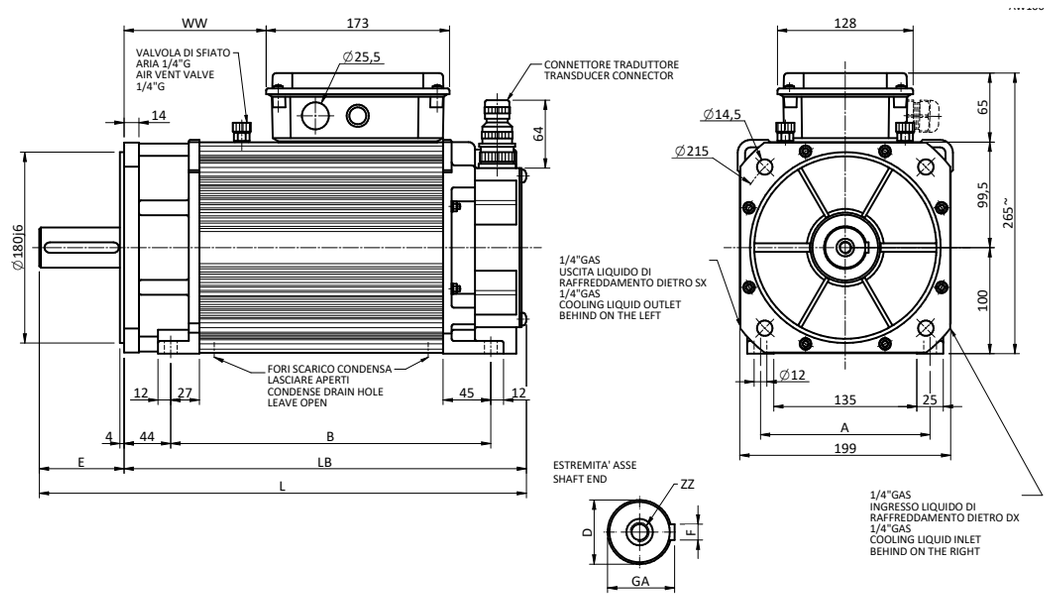

3256/0

AW100

Type	A	B	D	E	F	GA	L	LB	WW	ZZ
AW100 M	160	302	Ø 38k6	80	10h9	41	460	380	134	M12
AW100 L	160	362	Ø 38k6	80	10h9	41	520	440	194	M12
AW100 X	160	422	Ø 38k6	80	10h9	41	580	500	254	M12

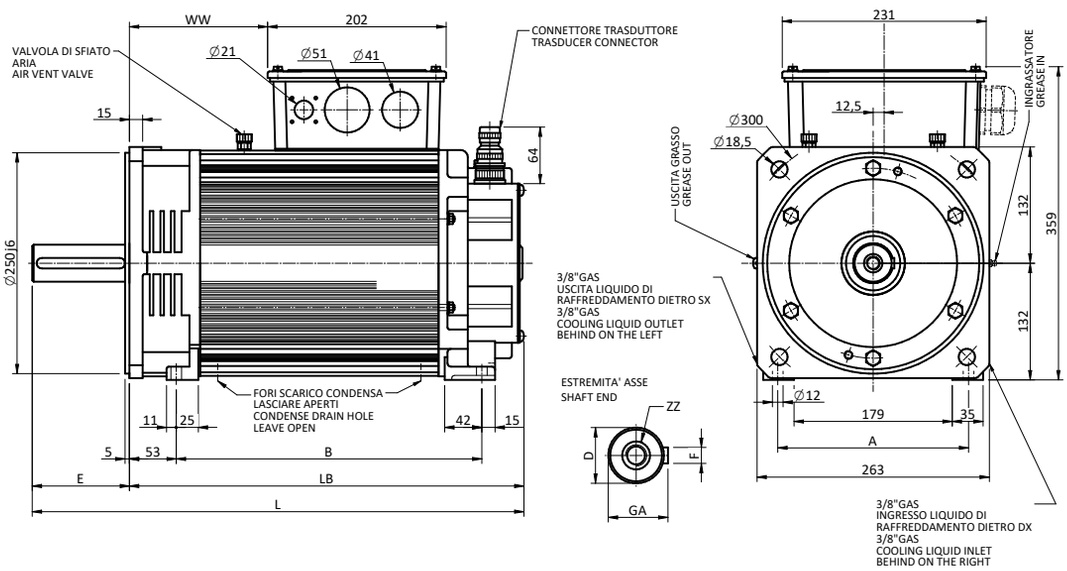

3257/0

AW132

Type	A	B	D	E	F	GA	L	LB	WW	ZZ
AW132 S	216	346	Ø 42k6	110	12h9	45	565	455	155	M16
AW132 L	216	421	Ø 42k6	110	12h9	45	640	530	230	M16
AW132 P	216	451	Ø 42k6	110	12h9	45	670	560	260	M16
AW132 X	216	511	Ø 42k6	110	12h9	45	730	620	320	M16

Overall Dimension

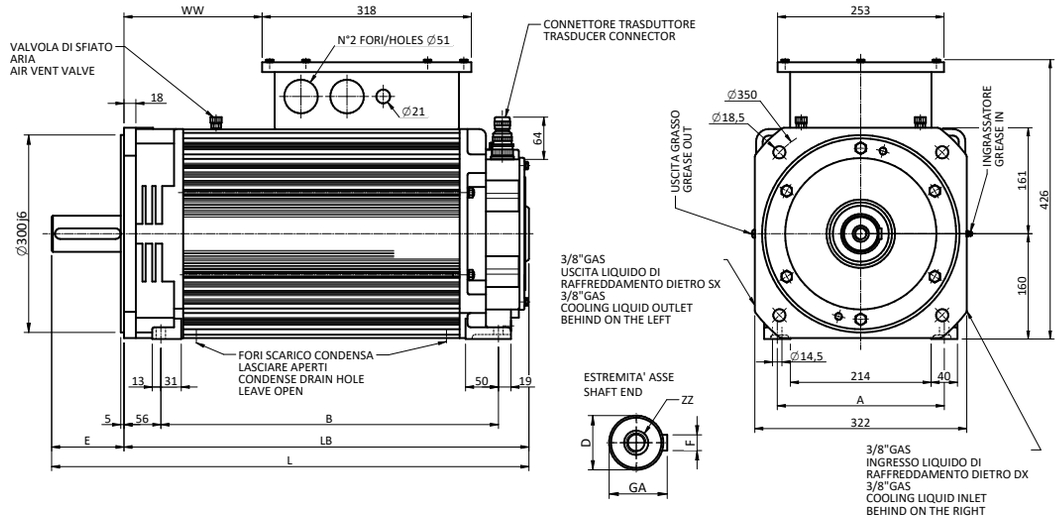

3258/0

AW160

Type	A	B	D	E	F	GA	L	LB	WW	ZZ
AW160 M	254	513	ø 55m6	110	16h9	59	725	615	204	M20
AW160 L	254	563	ø 55m6	110	16h9	59	775	665	254	M20
AW160 P	254	608	ø 55m6	110	16h9	59	820	710	299	M20
AW160 X	254	735	ø 55m6	110	16h9	59	947	837	426	M20

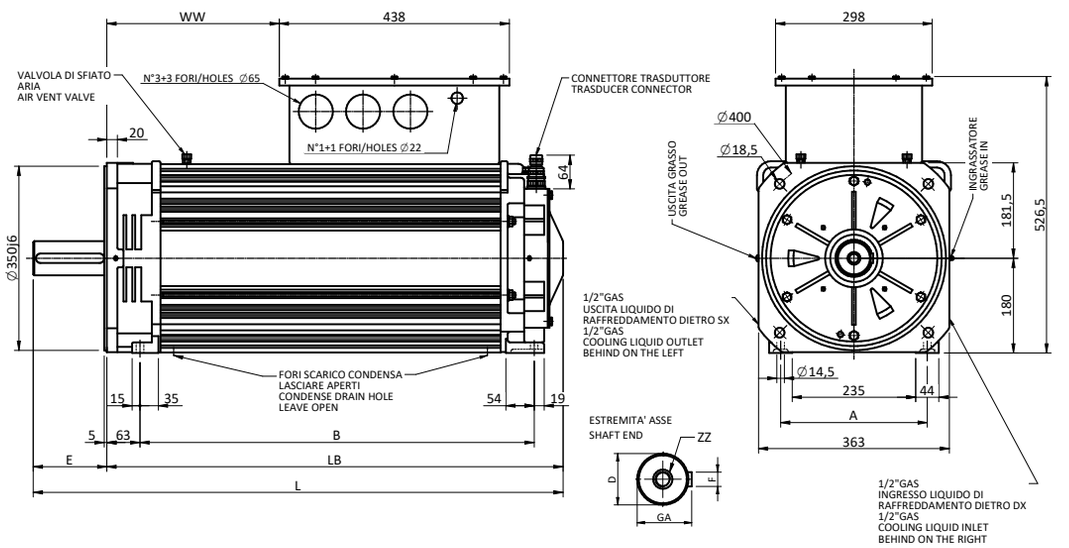

3259/0

AW180

Type	A	B	D	E	F	GA	L	LB	WW	ZZ
AW180 M	279	680	Ø 65m6	140	18h9	69	940	800	258	M20
AW180 L	279	750	Ø 65m6	140	18h9	69	1010	870	328	M20
AW180 X	279	870	Ø 65m6	140	18h9	69	1130	990	448	M20

Overall Dimension

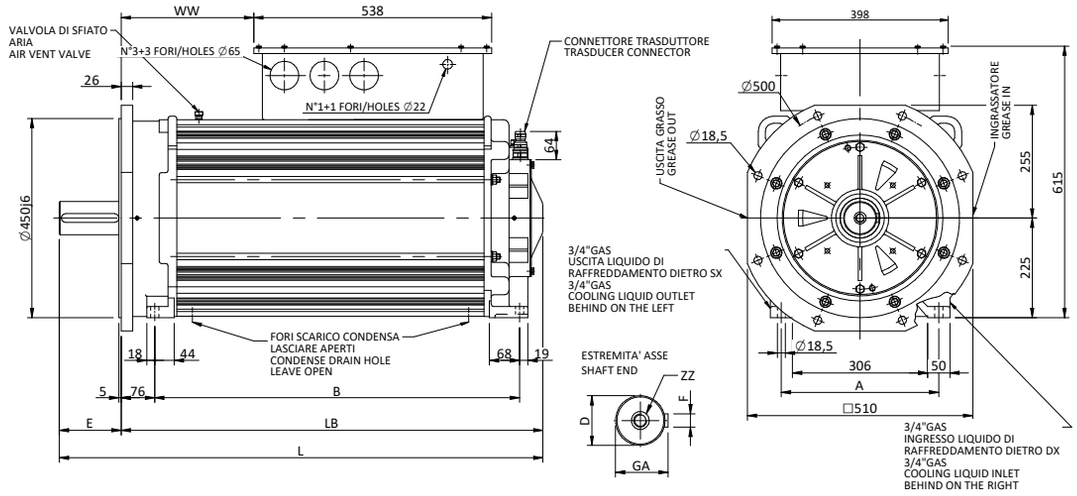

3260/A

AW225

Flange dimensions are referred to B35 version foreseen upon request

Type	A	B	D	E	F	GA	L	LB	WW	ZZ
AW225 L	356	825	Ø 75m6	140	20	79.5	1095	955	300	M20
AW225 P	356	905	Ø 85m6	170	22	90	1205	1035	380	M20
AW225 X	356	1025	Ø 85m6	170	22	90	1325	1155	500	M20

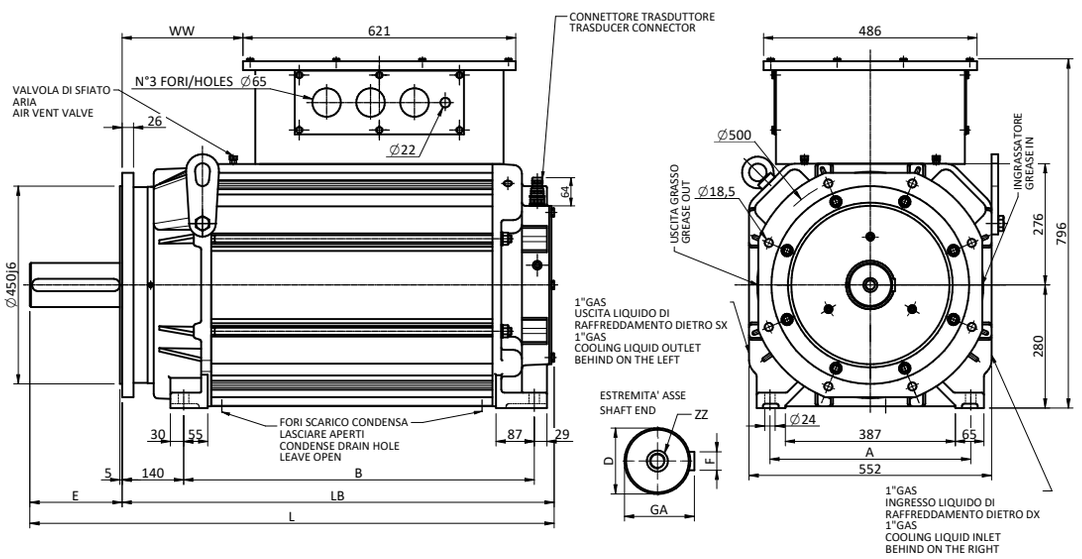

3261/0

AW280

Flange dimensions are referred to B35 version foreseen upon request

Type	A	B	D	E	F	GA	L	LB	WW	ZZ
AW280 S	457	798	Ø 100m6	210	28h9	106	1195	985	275	M24
AW280 L	457	878	Ø 100m6	210	28h9	106	1275	1065	355	M24
AW280 P	457	988	Ø 100m6	210	28h9	106	1385	1175	465	M24
AW280 X	457	1048	Ø 100m6	210	28h9	106	1445	1235	525	M24

Liquid cooling characteristics

SICME|ORANGE1

AW motors are liquid cooled. The heat generated by the losses is dissipated through the motor mechanical structure, which integrates the heat exchanger (jacket or ducts where the liquid circulate).
The circulation of the liquid is assured by the electric pump of the customer cooling system (towers, evaporators or chillers) which also regulates the temperature.
The cooling system is IC9W7, according to IEC 60034-5 Standards. The following table gives all information necessary to calculate the cooling system for the different motor frames.

Motor size		100	132	160	180	225	280	355
Liquid delivery	l/min	8	10	12	15	18	24	30
Cooling capacity	kW	= Pn – (0,95 x Pn x η%)						
Max perm. pressure	Bar	3	3	3	3	3	3	3
Max pressure drop	Bar	0,5	0,5	0,5	0,5	0,5	0,5	0,5
Coolant temperature *	18°C (min. 16°C) at rated operation							
Type of coolant	Water + anticorrosion/no-frost additives (max 20%)							
Cooling circuit	Closed with external heat exchanger							
Derating coefficent	If t>18°C see graph							

*input temperature

The quality of the water in the cooling system is very important for a reliable service of the motor and in order to prevent costly maintenance operations in case the water racket becomes blocked.

The temperature of the coolant must never drop below 16°C, to prevent condensate forming inside the motor.

Characteristics of the cooling liquid must be:

Water + Tyfocor (amb temp.-9°C)	**20%**
Ph	**6...9**
Total hardness – dH°	**8...14**
Chloride Cl – mg/l	**<200**
Sulphate SO42, - mg/l	**<200**
Oil – mg/l	**<10**
Permissible solid size – mm	**<0.1**

Power derating

The ideal temperature of the coolant is between 16°C and 18°C. Any coolant temperature over 18°C determines a decrease of the motor performances. Any coolant temperature under 16°C may cause condensation of the air inside the motor

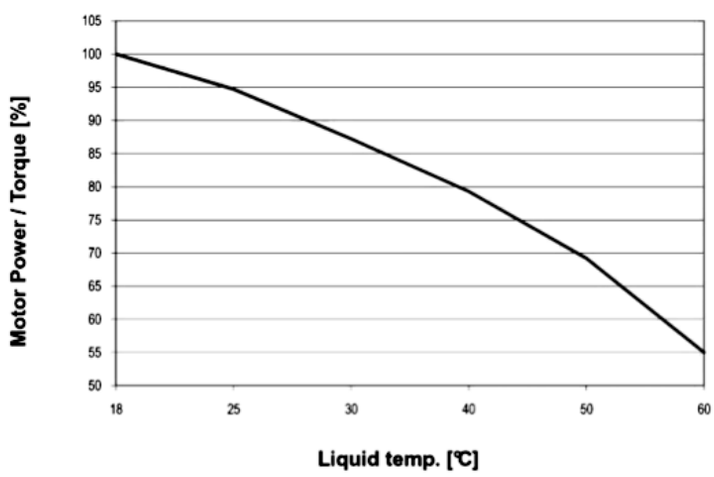

The information shown in this publication is purely indicative. Orange1 reserves the right to make any modifications to the products as it sees fit

ORANGE1
HOLDING

SICME ORANGE1 S.r.l.
Via del Lavoro 7
Montebello Vicentino
36054 - (VI) Italy
T. +39 0444 649399
F. +39 0444 440495

info@orange1.eu
www.orange1.eu

follow us

#09 - 05/2020 **rang.** DESIGN

ORANGE1 ELECTRIC MOTORS
ORANGE1 FOUNDRY
ORANGE1 PRECISION
HUNGARY
SICME ORANGE1